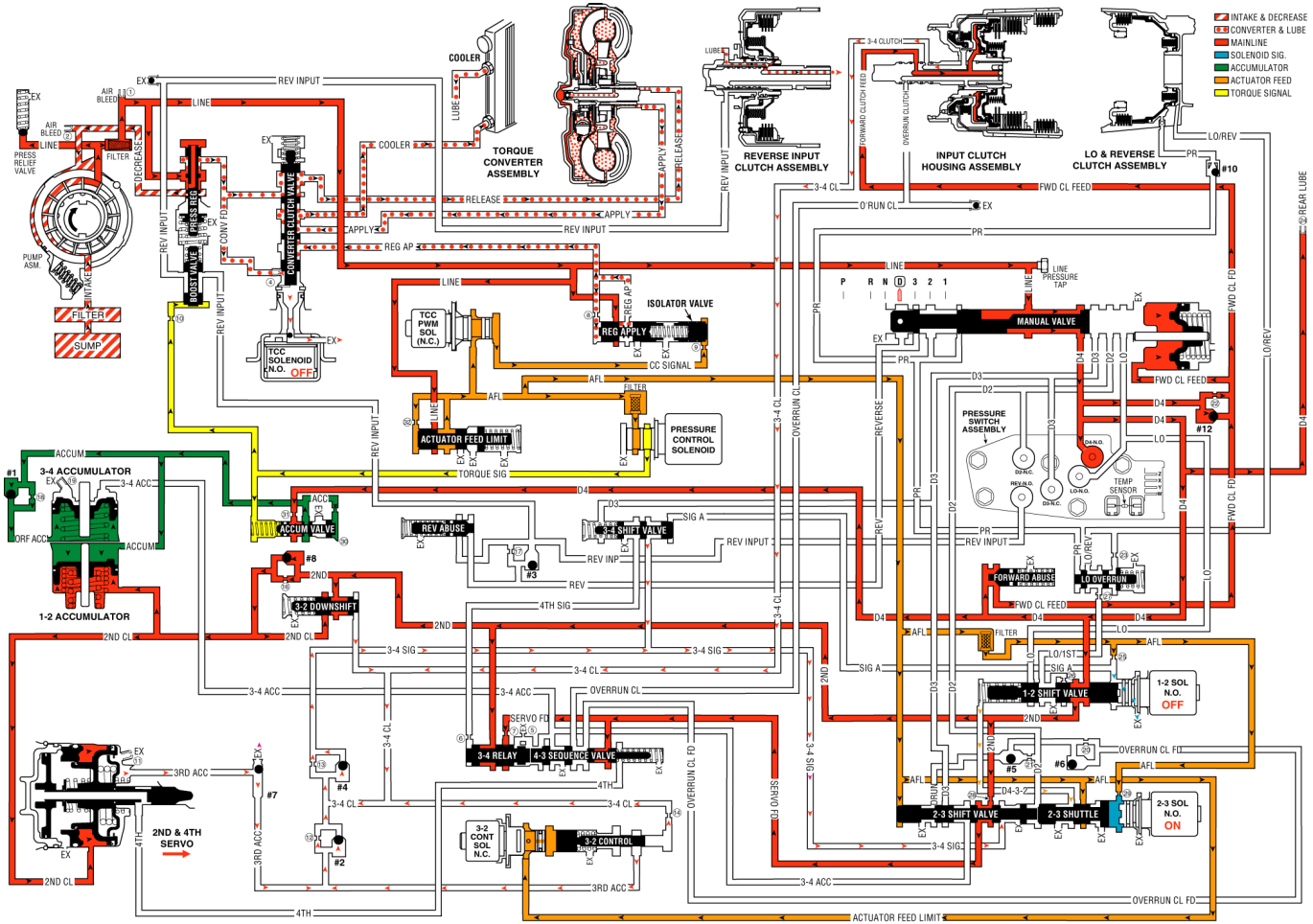

© 2021 General Motors. All rights reserved.