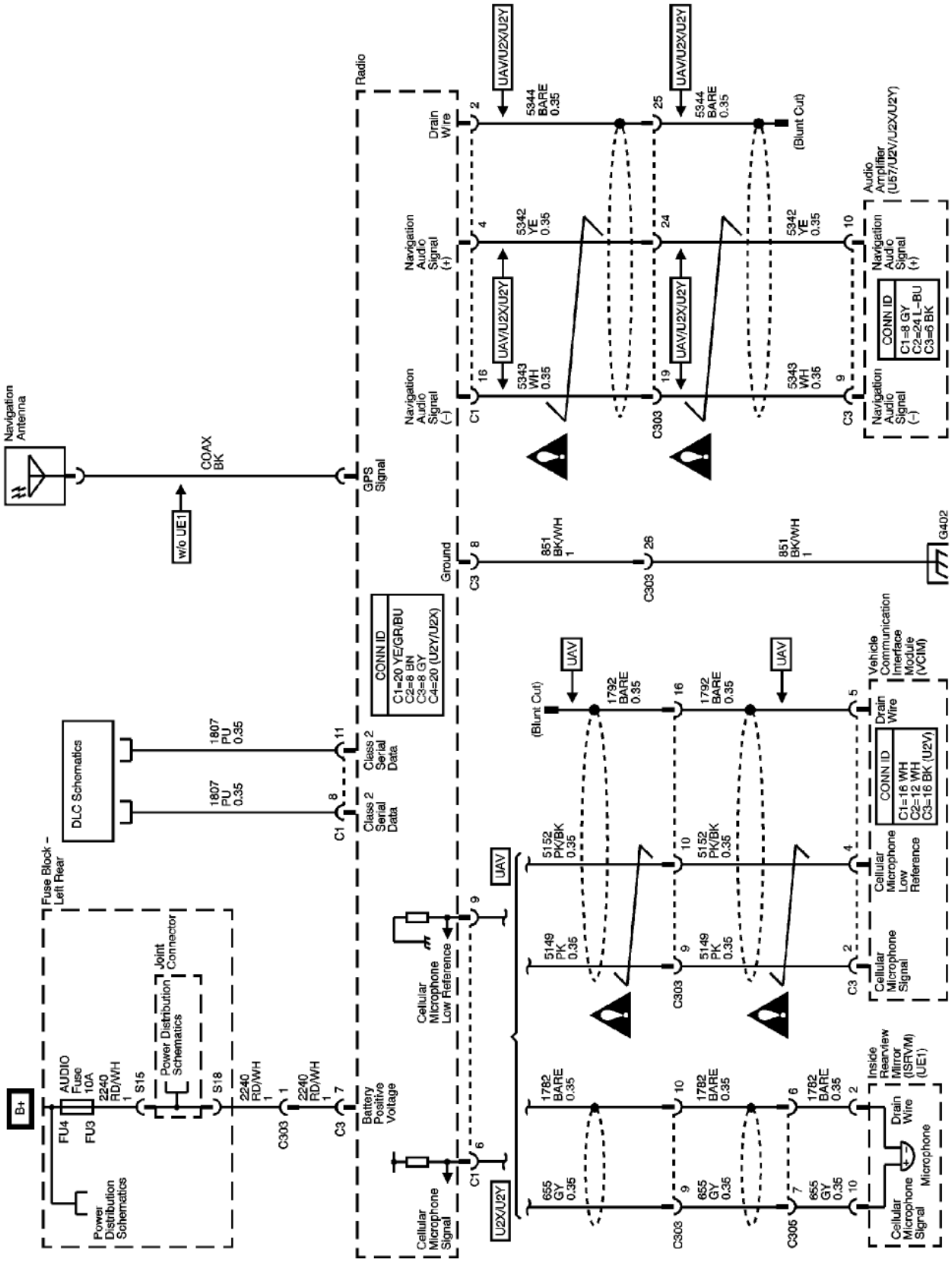Navigation Antenna, Radio, Audio Amplifier, VCIM, and ISRVM