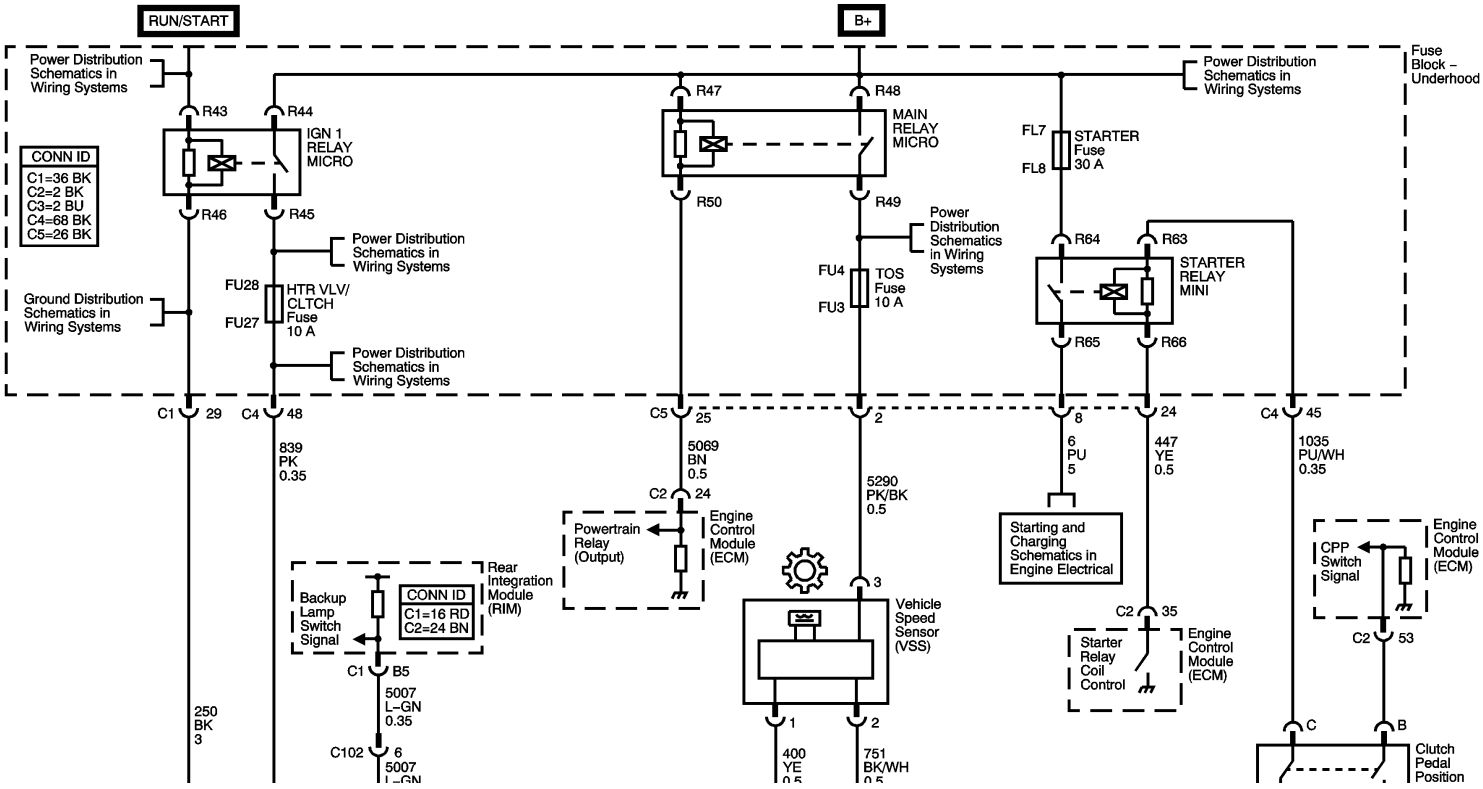
RUN/START
B+
Power Distribution Schematics in Wiring Systems
Fuse Block – Underhood
CONN ID
C1=36 BK
C2=2 BK
C3=2 BU
C4=68 BK
C5=26 BK
R43
R44
IGN 1 RELAY MICRO
R46
R45
R47
R48
MAIN RELAY MICRO
R50
R49
FL7
FL8
STARTER Fuse 30 A
R64
R63
STARTER RELAY MINI
R65
R66
FU28
FU27
HTR VLV/ CLTCH Fuse 10 A
FU4
FU3
TOS Fuse 10 A
Ground Distribution Schematics in Wiring Systems
C1 29
C4 48
C5 25
2
8
24
C4 45
839 PK 0.35
5069 BN 0.5
5290 PK/BK 0.5
6 PU 5
447 YE 0.5
1035 PU/WH 0.35
C2 24
Powertrain Relay (Output)
Engine Control Module (ECM)
Starting and Charging Schematics in Engine Electrical
CPP Switch Signal
Engine Control Module (ECM)
Rear Integration Module (RIM)
Backup Lamp Switch Signal
CONN ID
C1=16 RD
C2=24 BN
3
Vehicle Speed Sensor (VSS)
C2 35
Starter Relay Coil Control
Engine Control Module (ECM)
C2 53
C1 B5
5007 L–GN 0.35
250 BK 3
C102 6
5007 L–GN
1
2
400 YE 0.5
751 BK/WH 0.5
C
B
Clutch Pedal Position