Fig. 66: Power Distribution Circuit (4 of 4)

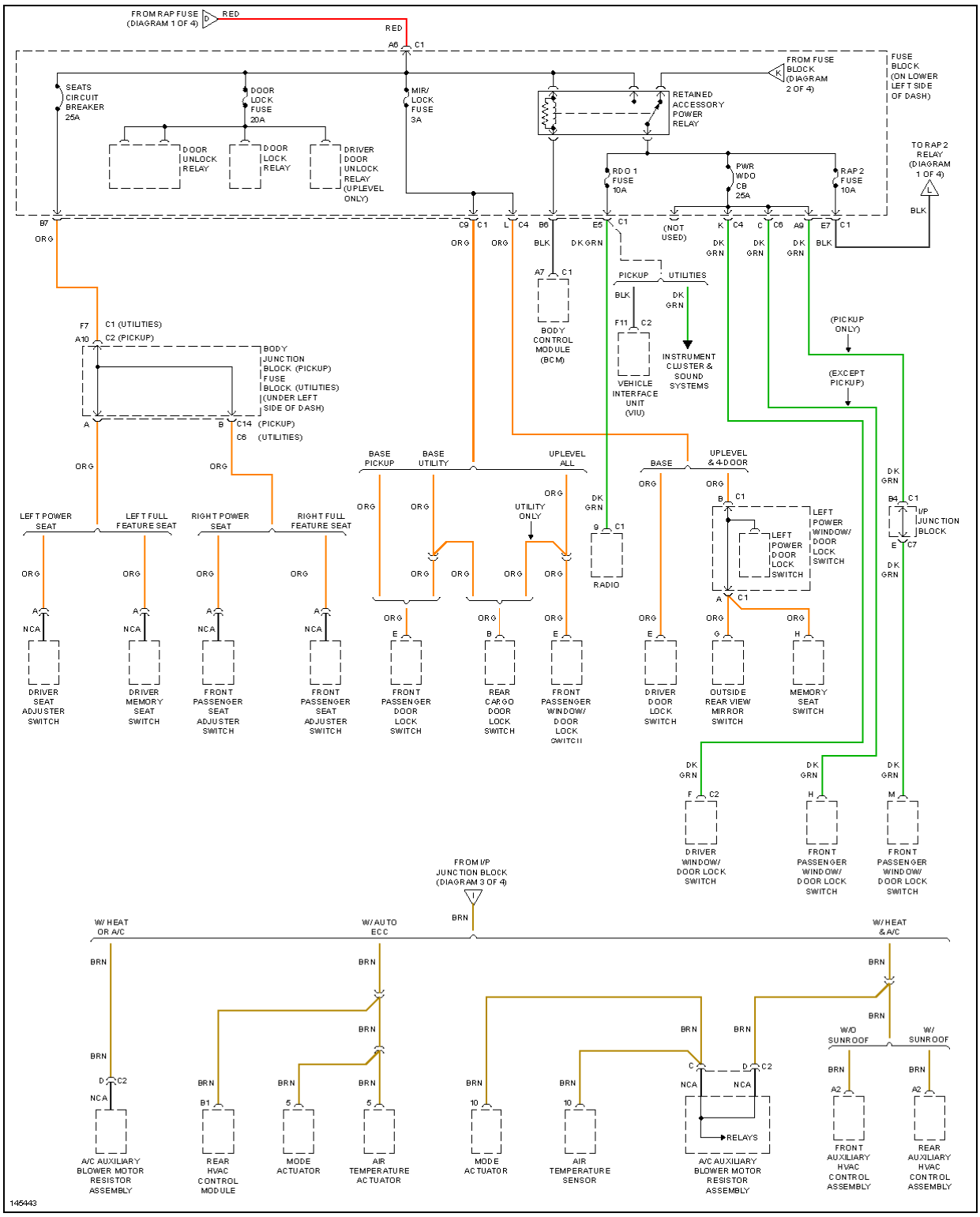

© 2005 Mitchell Repair Information Company, LLC.