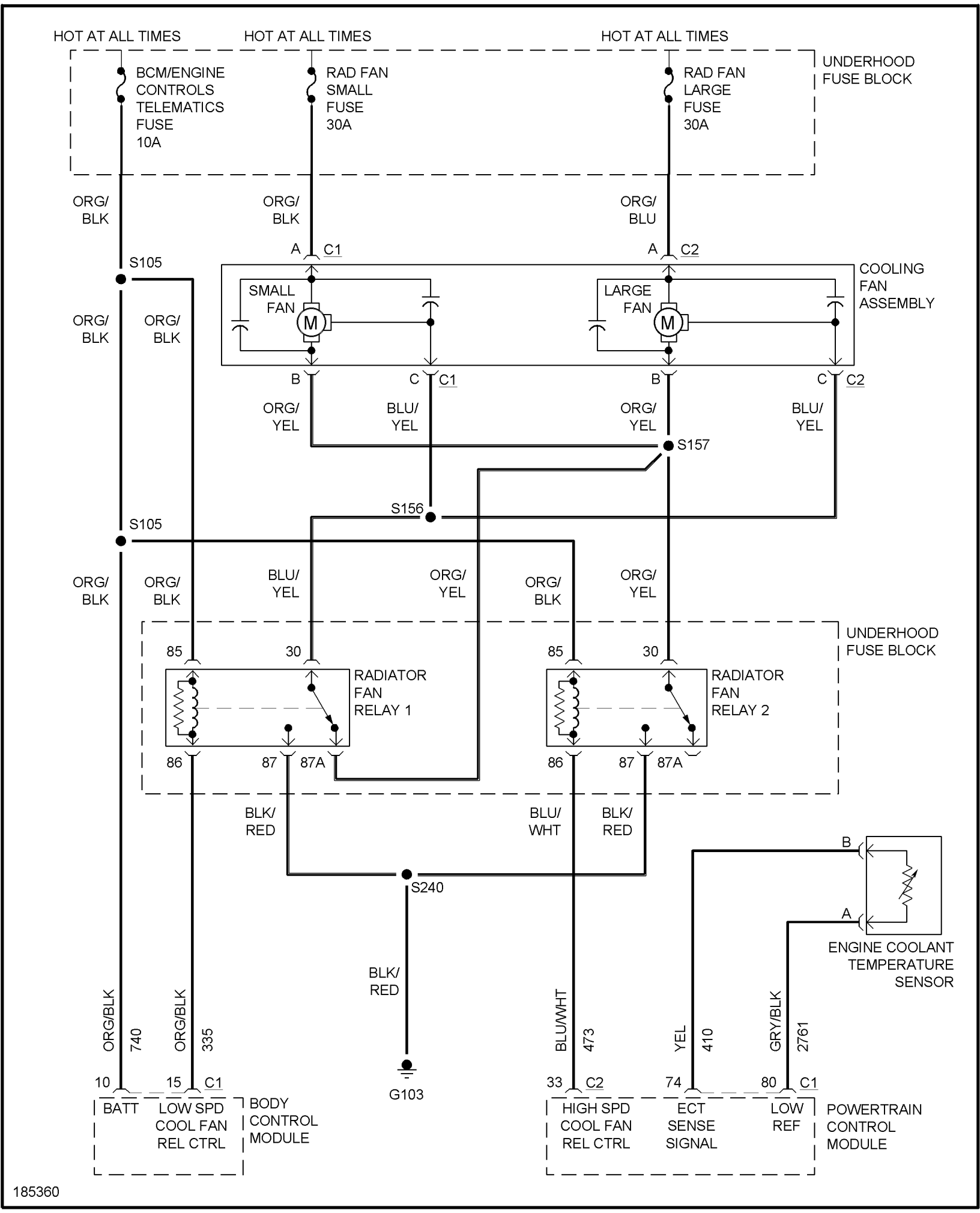
HOT AT ALL TIMES
HOT AT ALL TIMES
HOT AT ALL TIMES
UNDERHOOD FUSE BLOCK
BCM/ENGINE CONTROLS TELEMATICS FUSE 10A
RAD FAN SMALL FUSE 30A
RAD FAN LARGE FUSE 30A
ORG/ BLK
ORG/ BLK
ORG/ BLU
A
C1
A
C2
S105
COOLING FAN ASSEMBLY
SMALL FAN
LARGE FAN
M
M
ORG/ BLK
ORG/ BLK
B
C
C1
B
C
C2
ORG/ YEL
BLU/ YEL
ORG/ YEL
BLU/ YEL
S157
S156
S105
ORG/ BLK
ORG/ BLK
BLU/ YEL
ORG/ YEL
ORG/ BLK
ORG/ YEL
UNDERHOOD FUSE BLOCK
85
30
85
30
RADIATOR FAN RELAY 1
RADIATOR FAN RELAY 2
86
87
87A
86
87
87A
BLK/ RED
BLU/ WHT
BLK/ RED
B
S240
A
ENGINE COOLANT TEMPERATURE SENSOR
BLK/ RED
ORG/BLK
740
ORG/BLK
335
BLU/WHT
473
YEL
410
GRY/BLK
2761
10
15
C1
33
C2
74
80
C1
G103
BATT
LOW SPD COOL FAN REL CTRL
BODY CONTROL MODULE
HIGH SPD COOL FAN REL CTRL
ECT SENSE SIGNAL
LOW REF
POWERTRAIN CONTROL MODULE
185360