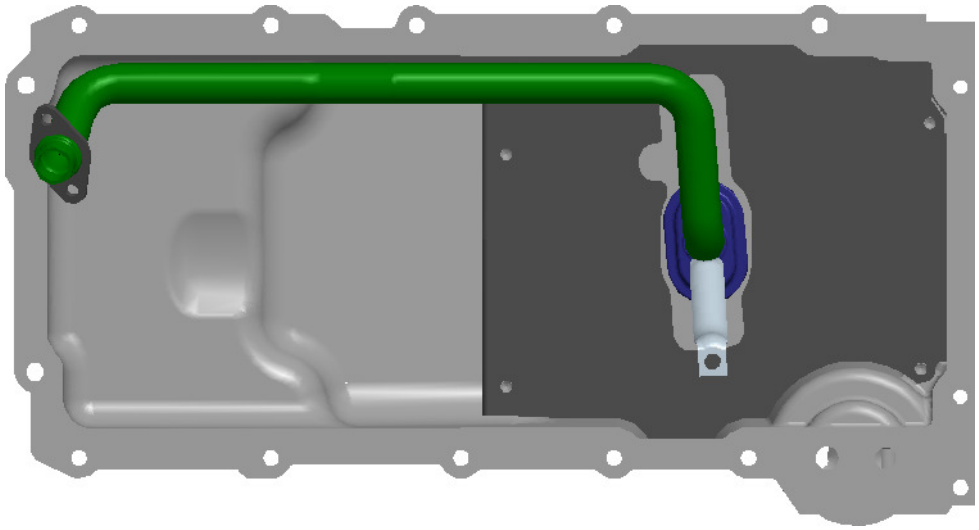

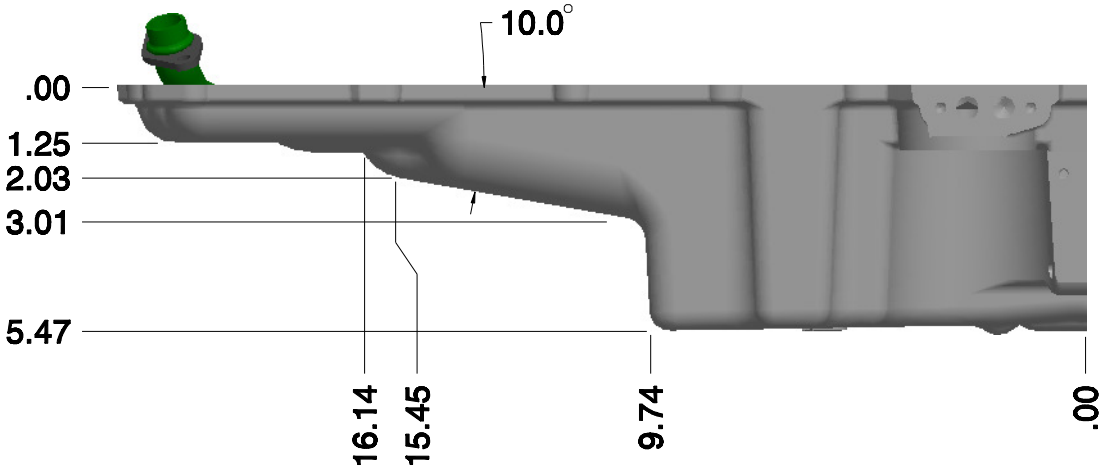
10.0°
.00
1.25
2.03
3.01
5.47
16.14
15.45
9.74
.00

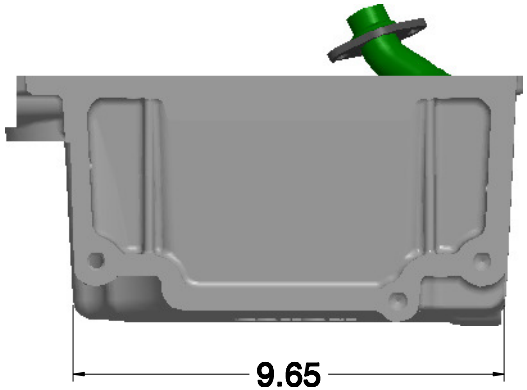
9.65