2003 Chevy Truck K 1500 Truck 4WD V8-5.3L VIN T

Vehicle > Powertrain Management > Diagrams > Electrical - Interactive Color (Non OE)

Engine Controls - Page 1 of 5

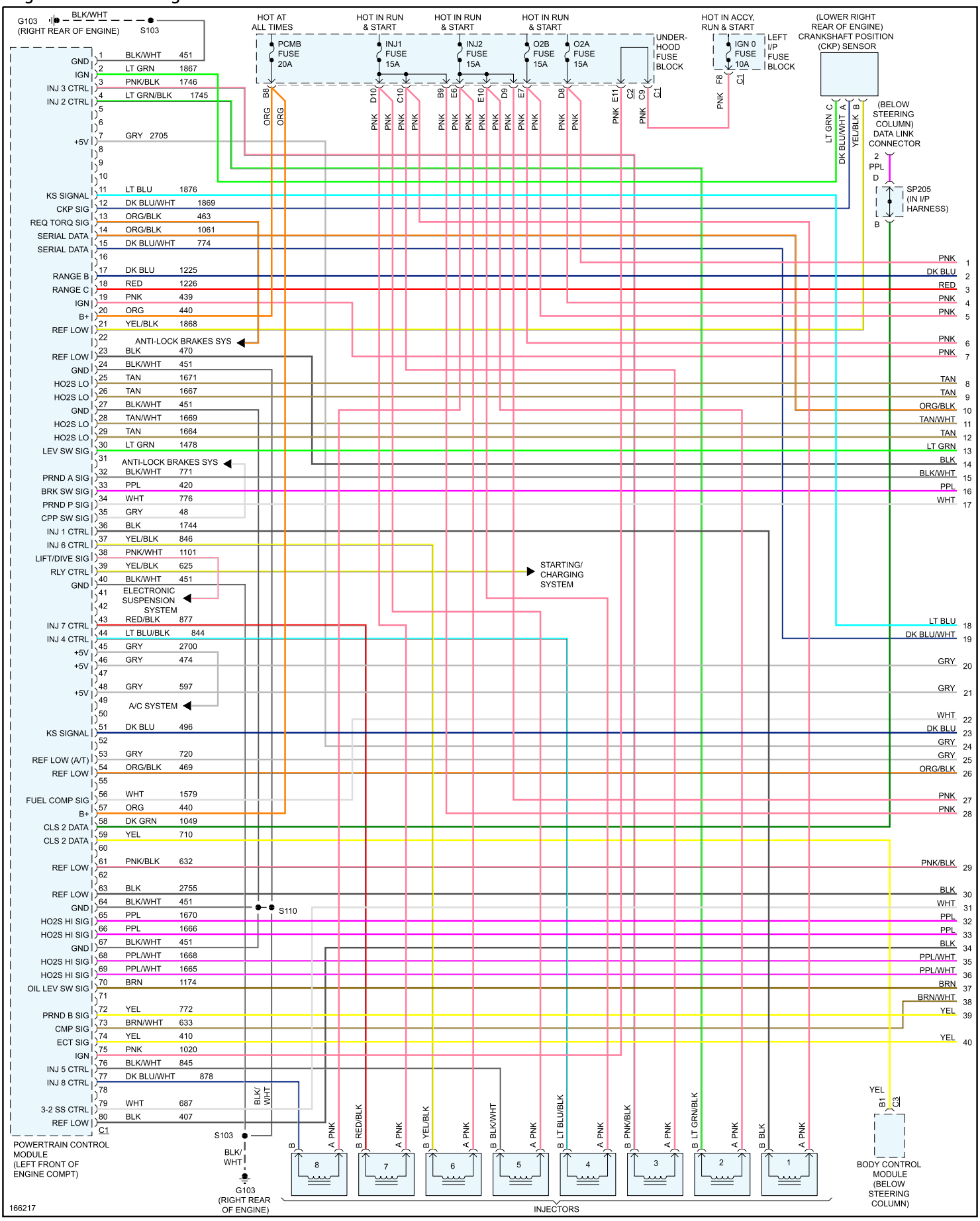

2003 Chevy Truck K 1500 Truck 4WD V8-5.3L VIN T

Vehicle > Powertrain Management > Diagrams > Electrical - Interactive Color (Non OE)

Engine Controls - Page 2 of 5

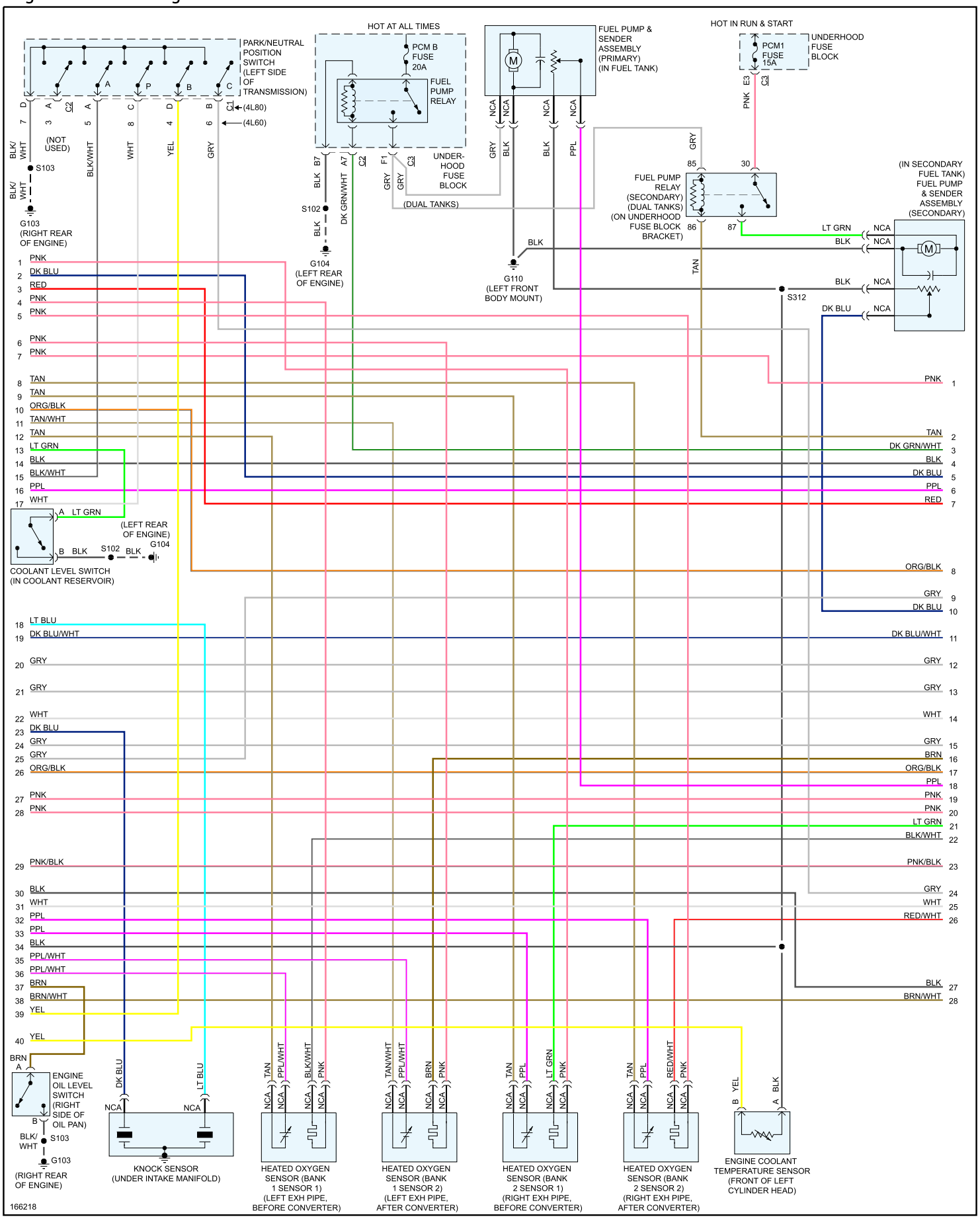

2003 Chevy Truck K 1500 Truck 4WD V8-5.3L VIN T

Vehicle > Powertrain Management > Diagrams > Electrical - Interactive Color (Non OE)

Engine Controls - Page 3 of 5

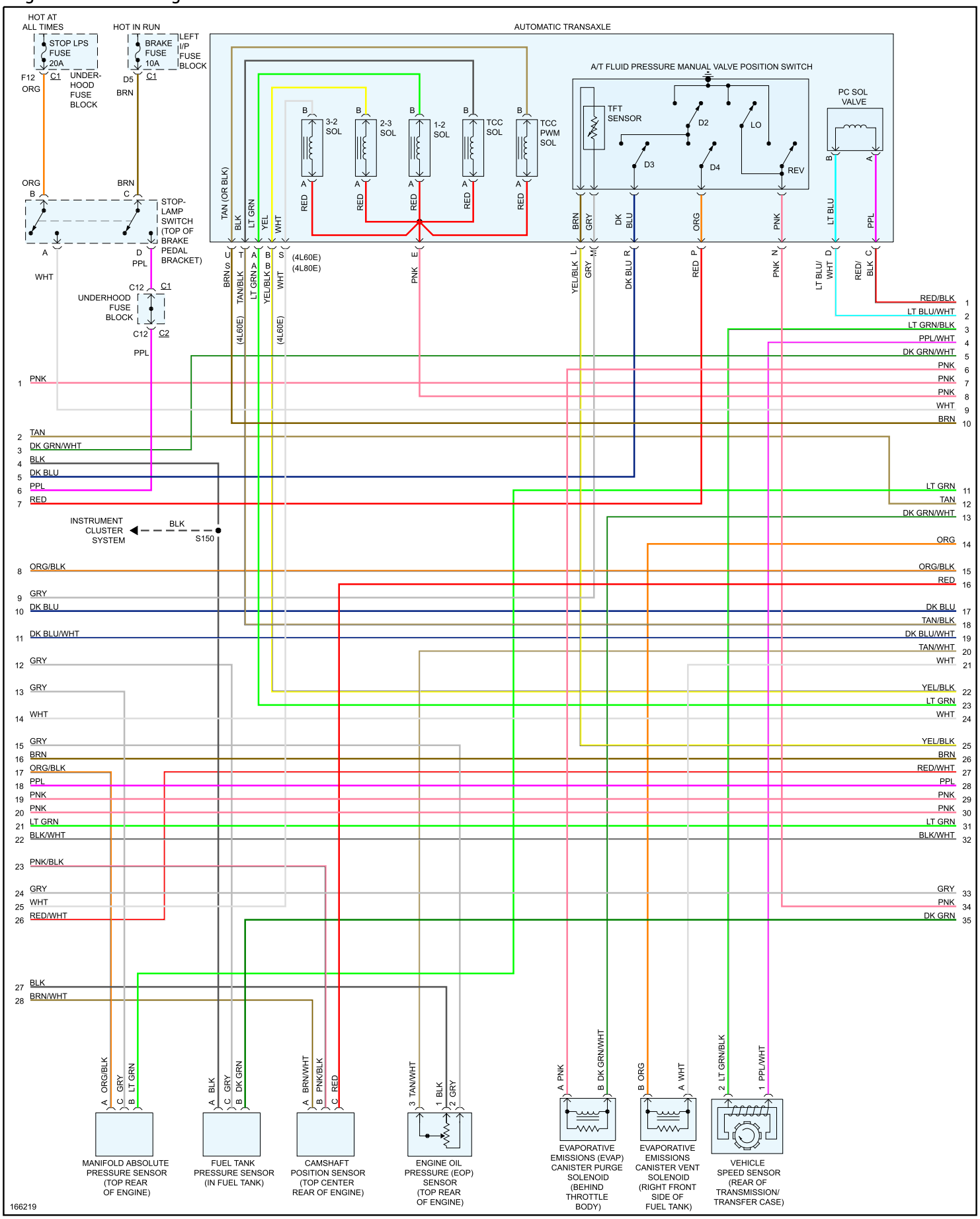

2003 Chevy Truck K 1500 Truck 4WD V8-5.3L VIN T

Vehicle > Powertrain Management > Diagrams > Electrical - Interactive Color (Non OE)

Engine Controls - Page 4 of 5

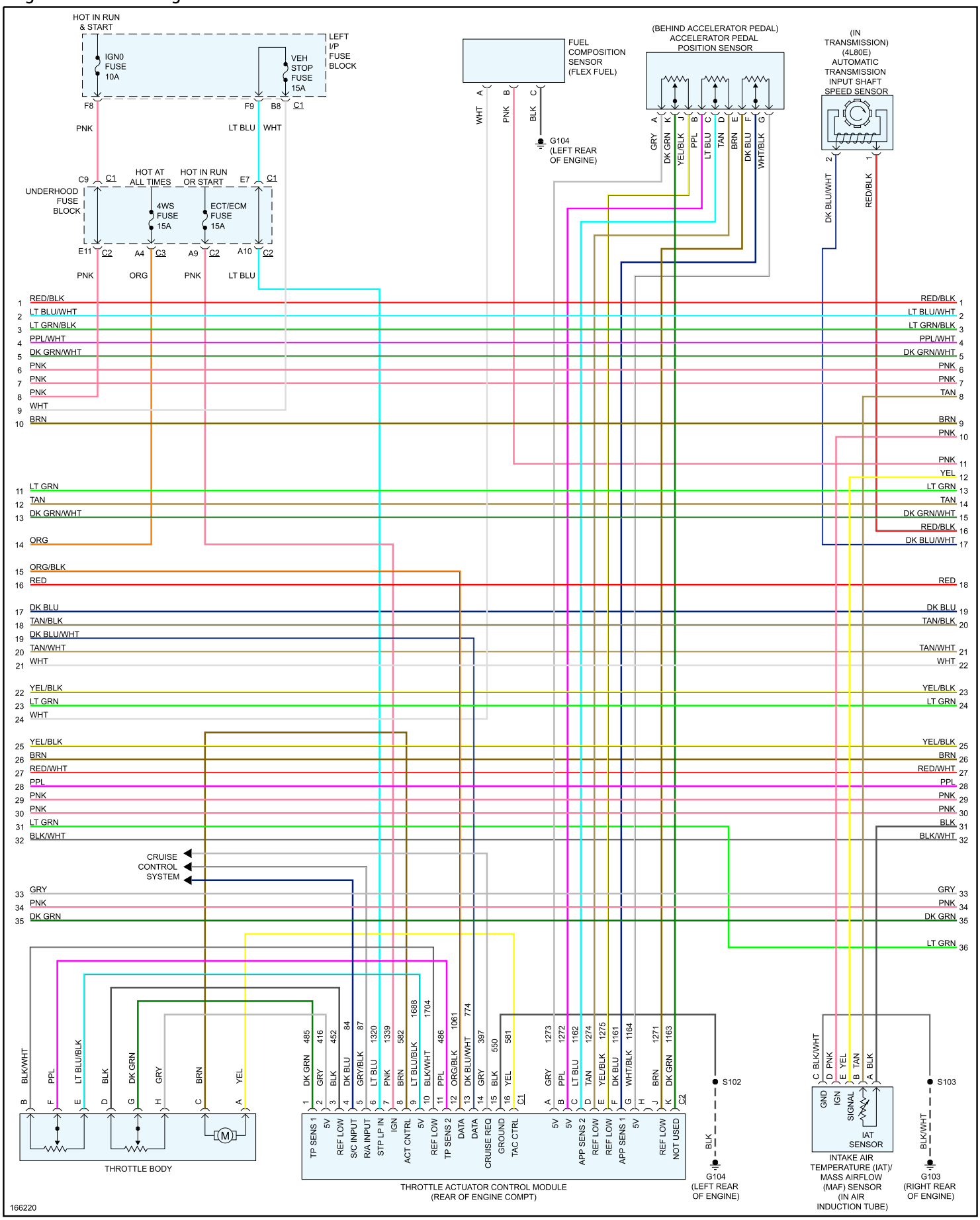

2003 Chevy Truck K 1500 Truck 4WD V8-5.3L VIN T

Vehicle > Powertrain Management > Diagrams > Electrical - Interactive Color (Non OE)
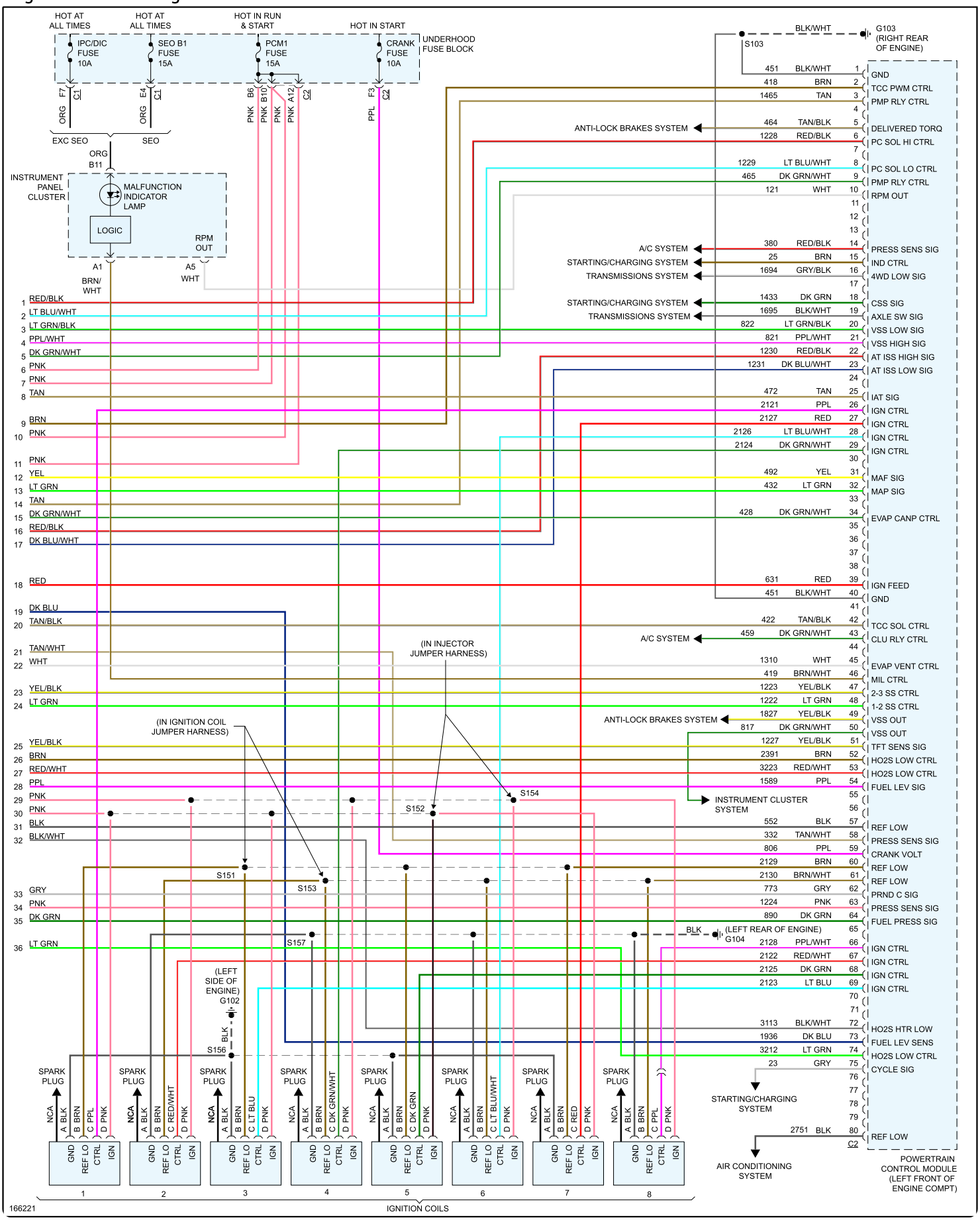
Engine Controls - Page 5 of 5