2000 Chevy Truck C 1500 Truck 2WD V8-4.8L VIN V

Vehicle > Powertrain Management > Diagrams > Electrical - Interactive Color (Non OE)

Engine Controls - Except Canadian Built - Page 1 of 5

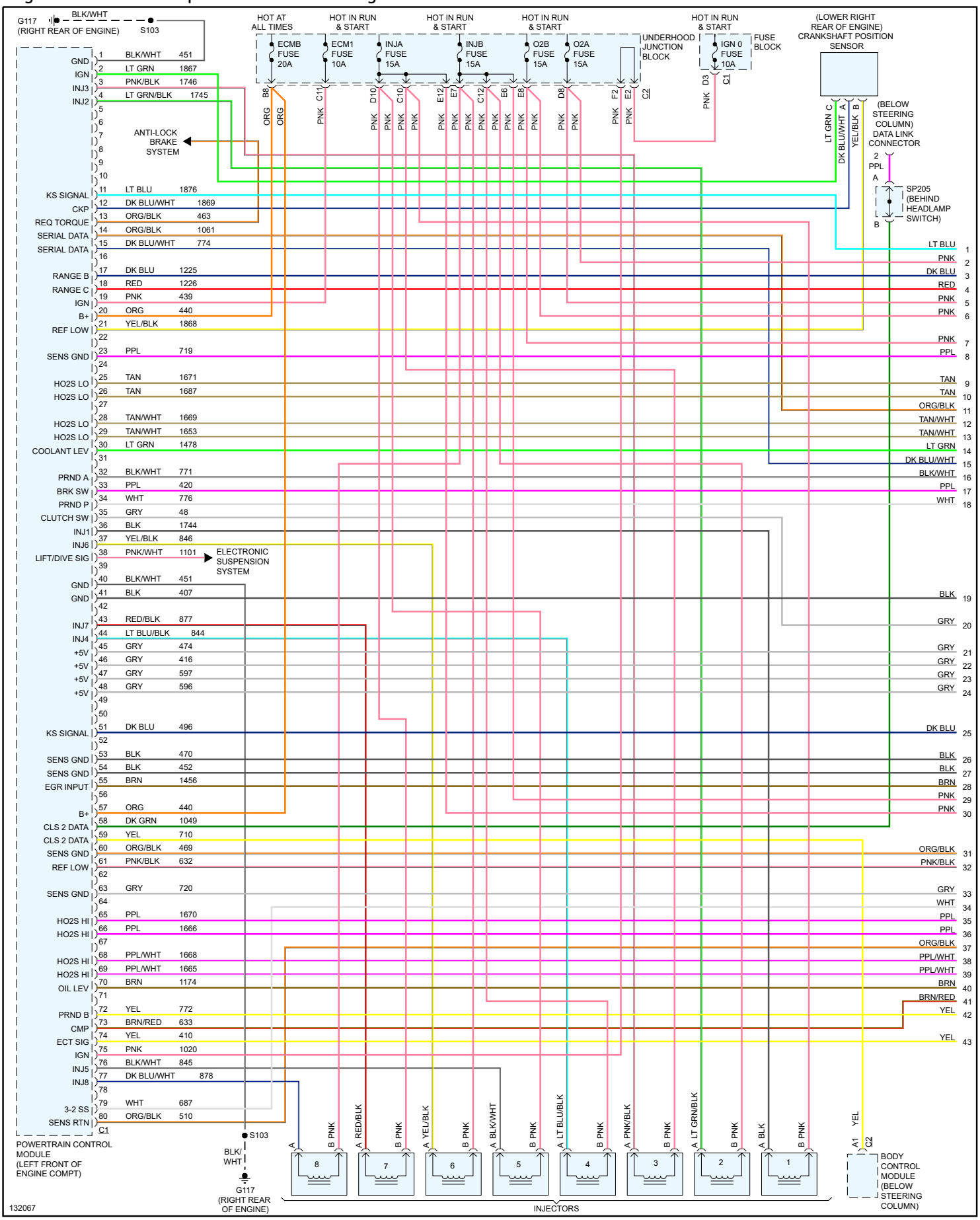

2000 Chevy Truck C 1500 Truck 2WD V8-4.8L VIN V

Vehicle > Powertrain Management > Diagrams > Electrical - Interactive Color (Non OE)

Engine Controls - Except Canadian Built - Page 2 of 5

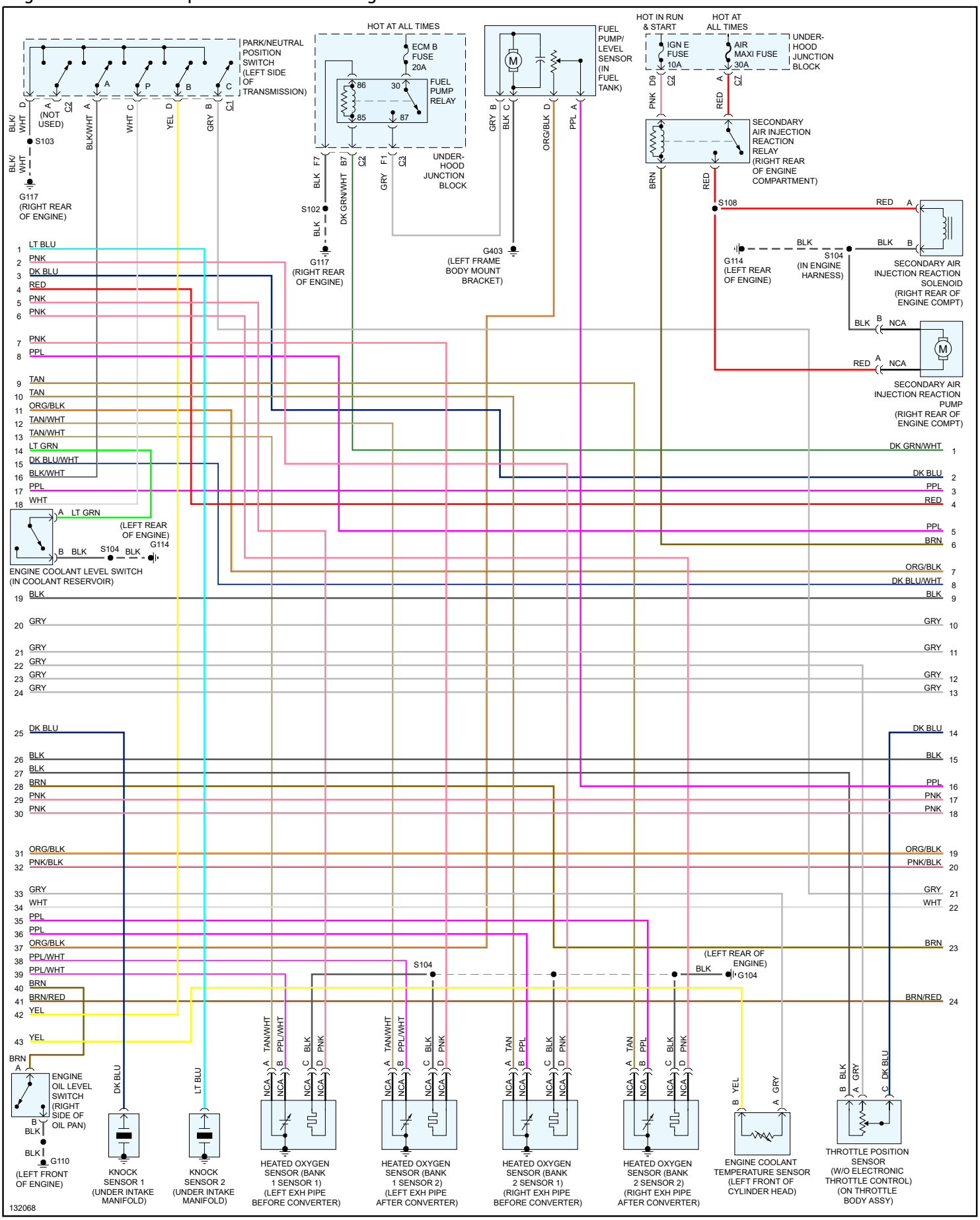

2000 Chevy Truck C 1500 Truck 2WD V8-4.8L VIN V

Vehicle > Powertrain Management > Diagrams > Electrical - Interactive Color (Non OE)

Engine Controls - Except Canadian Built - Page 3 of 5

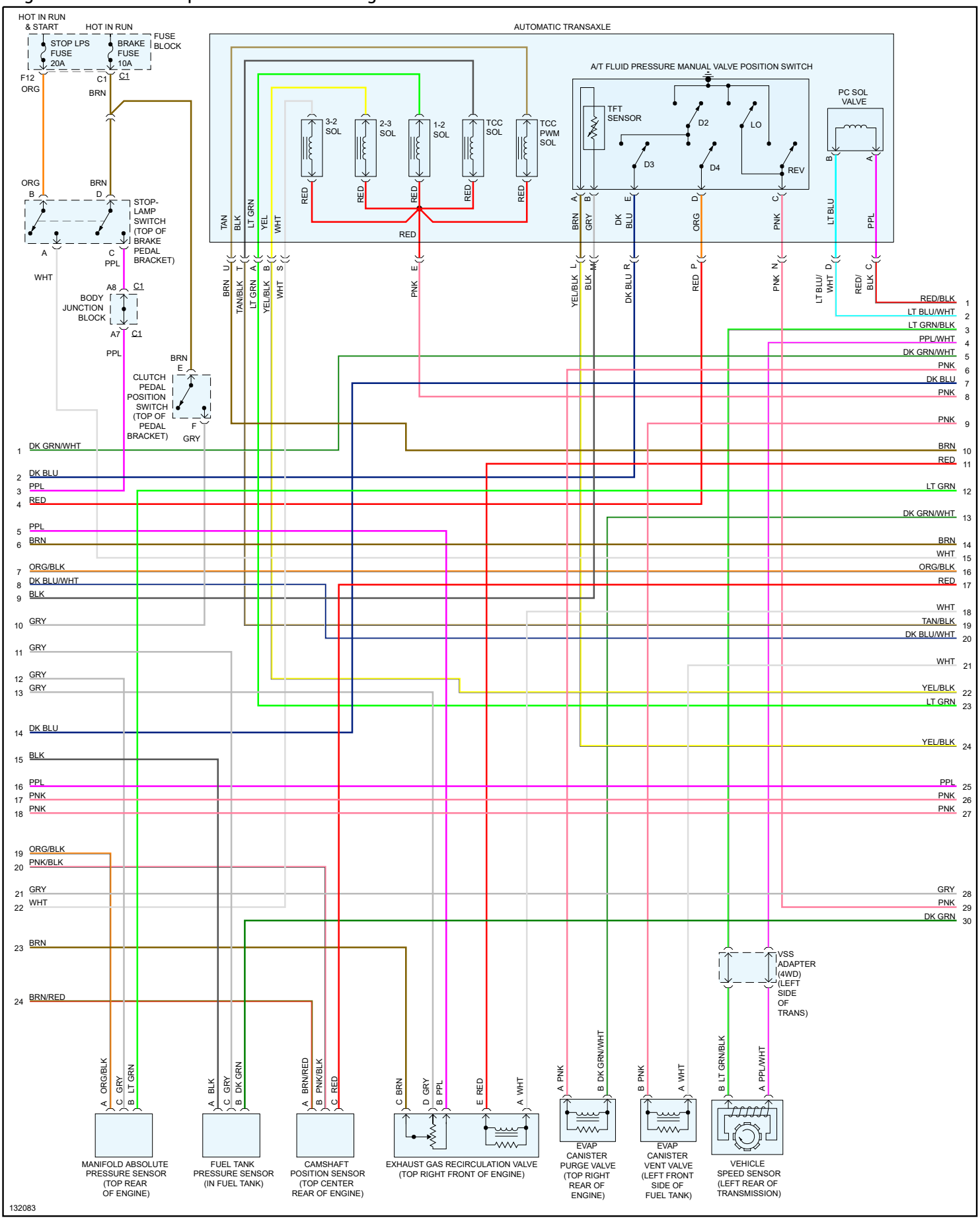

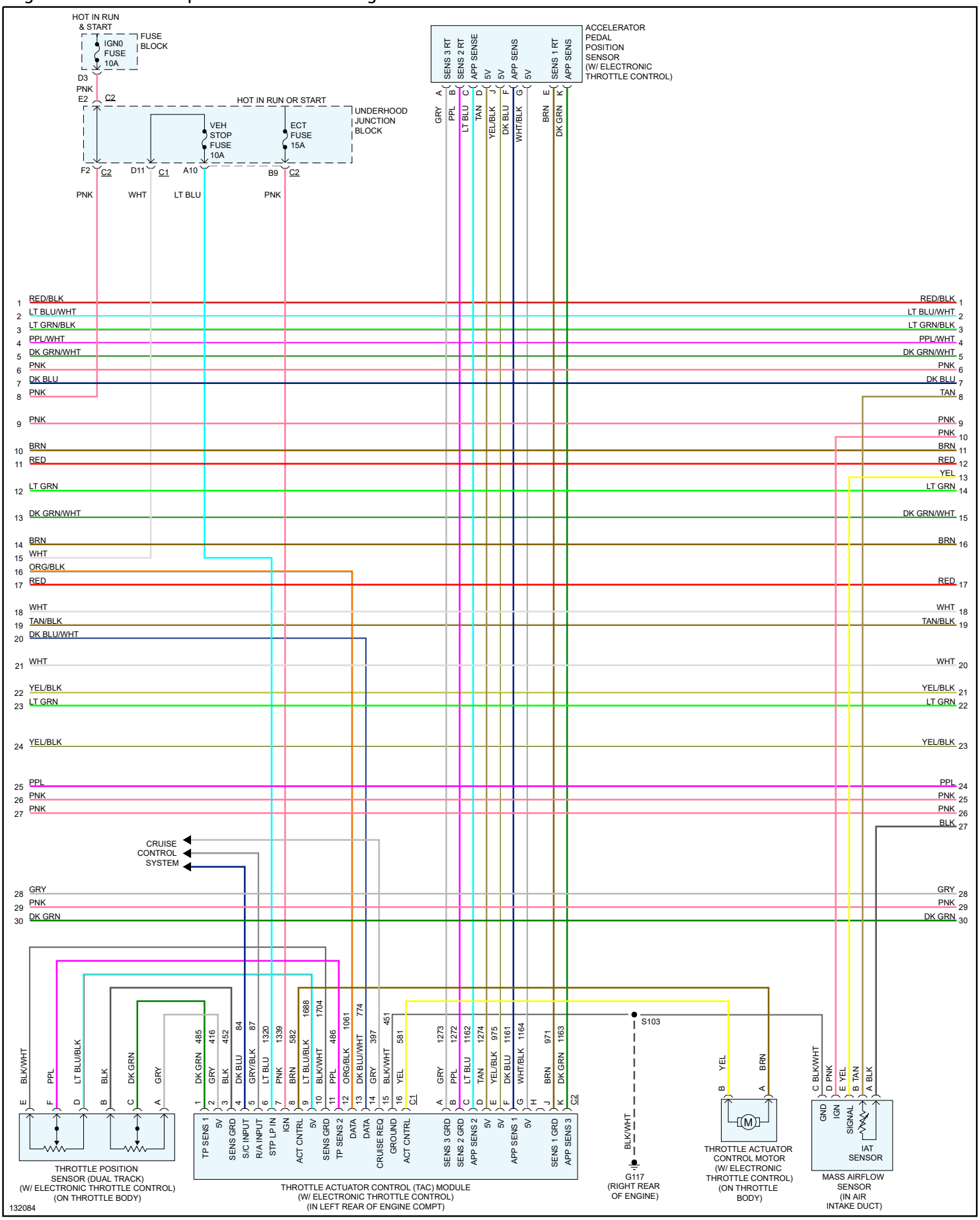
HOT IN RUN & START
FUSE BLOCK
IGN0 FUSE 10A
D3
PNK
E2
C2
HOT IN RUN OR START
UNDERHOOD JUNCTION BLOCK
VEH STOP FUSE 10A
ECT FUSE 15A
F2
D11
C1
A10
B9
PNK
WHT
LT BLU
PNK
ACCELERATOR PEDAL POSITION SENSOR (W/ ELECTRONIC THROTTLE CONTROL)
SENS 3 RT
SENS 2 RT
APP SENSE
5V
5V
APP SENS
5V
SENS 1 RT
APP SENS
GRY
PPL
LT BLU
TAN
YEL/BLK
DK BLU
WHT/BLK
BRN
DK GRN
RED/BLK
LT BLU/WHT
LT GRN/BLK
PPL/WHT
DK GRN/WHT
PNK
DK BLU
PNK
TAN
PNK
PNK
BRN
RED
YEL
LT GRN
DK GRN/WHT
BRN
WHT
ORG/BLK
RED
WHT
TAN/BLK
DK BLU/WHT
WHT
YEL/BLK
LT GRN
YEL/BLK
PPL
PNK
PNK
BLK
CRUISE CONTROL SYSTEM
GRY
PNK
DK GRN
BLK/WHT
PPL
LT BLU/BLK
BLK
DK GRN
GRY
DK GRN 485
GRY 416
BLK 452
DK BLU 84
GRY/BLK 87
LT BLU 1320
PNK 1339
BRN 582
LT BLU/BLK 1688
BLK/WHT 1704
PPL 486
ORG/BLK 1061
DK BLU/WHT 774
GRY 397
BLK/WHT 451
YEL 581
GRY 1273
PPL 1272
LT BLU 1162
TAN 1274
YEL/BLK 975
DK BLU 1161
WHT/BLK 1164
BRN 971
DK GRN 1163
S103
YEL
BRN
BLK/WHT
BLK/WHT
C BLK/WHT
D PNK
E YEL
B TAN
A BLK
TP SENS 1
5V
SENS GRD
S/C INPUT
R/A INPUT
STP LP IN
IGN
ACT CNTRL
5V
SENS GRD
TP SENS 2
DATA
DATA
CRUISE REQ
GROUND
ACT CNTRL
SENS 3 GRD
SENS 2 GRD
APP SENS 2
5V
5V
APP SENS 1
5V
SENS 1 GRD
APP SENS 3
GND
IGN
SIGNAL
IAT SENSOR
THROTTLE POSITION SENSOR (DUAL TRACK) (W/ ELECTRONIC THROTTLE CONTROL) (ON THROTTLE BODY)
THROTTLE ACTUATOR CONTROL (TAC) MODULE (W/ ELECTRONIC THROTTLE CONTROL) (IN LEFT REAR OF ENGINE COMPT)
G117 (RIGHT REAR OF ENGINE)
THROTTLE ACTUATOR CONTROL MOTOR (W/ ELECTRONIC THROTTLE CONTROL) (ON THROTTLE BODY)
MASS AIRFLOW SENSOR (IN AIR INTAKE DUCT)
132084

2000 Chevy Truck C 1500 Truck 2WD V8-4.8L VIN V

Vehicle > Powertrain Management > Diagrams > Electrical - Interactive Color (Non OE)
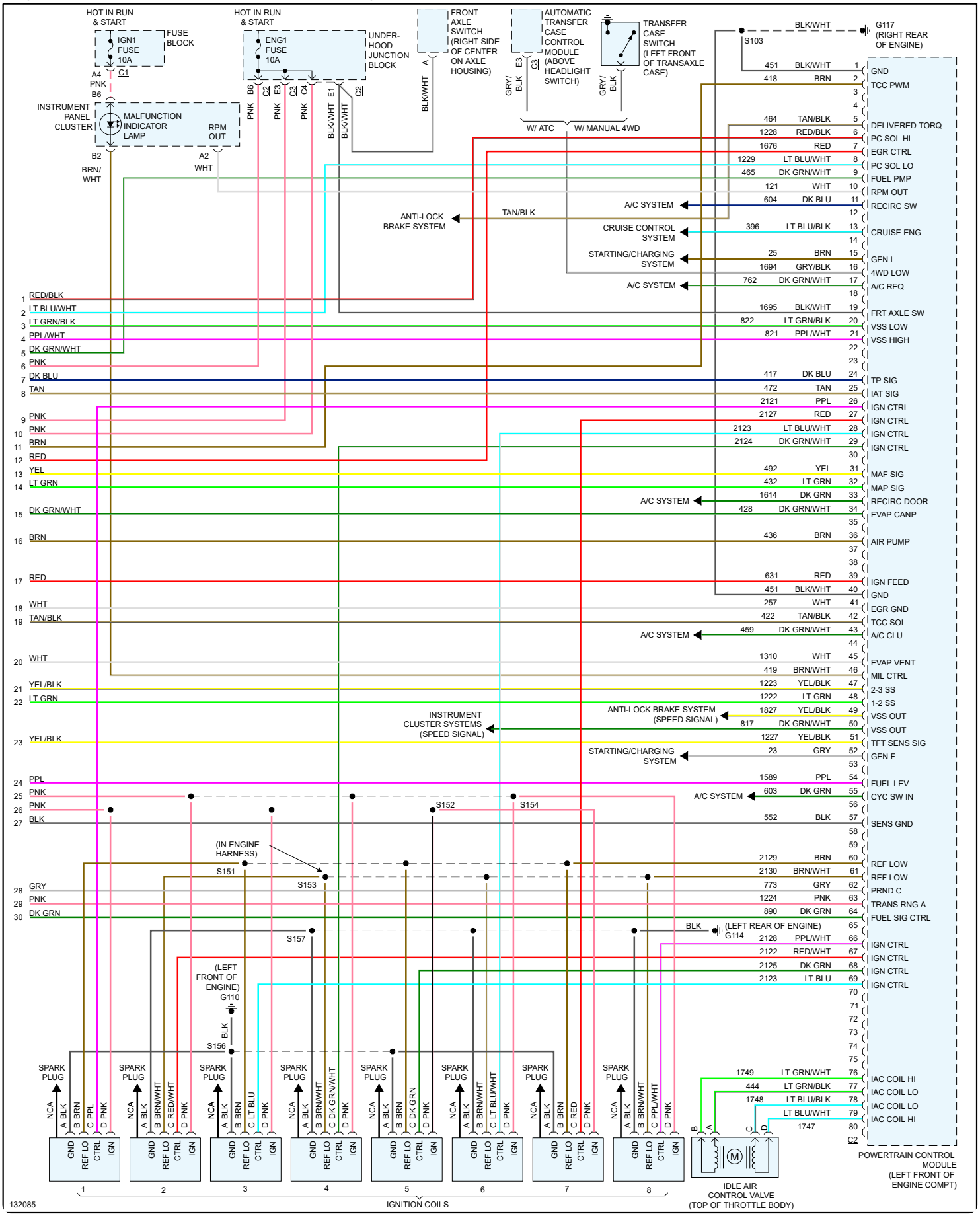
Engine Controls - Except Canadian Built - Page 5 of 5