2015 Chevrolet Camaro V8-6.2L VIN W

Vehicle > Powertrain Management > Diagrams > Electrical - Interactive Color (Non OE)

Engine Controls - Page 1 of 6

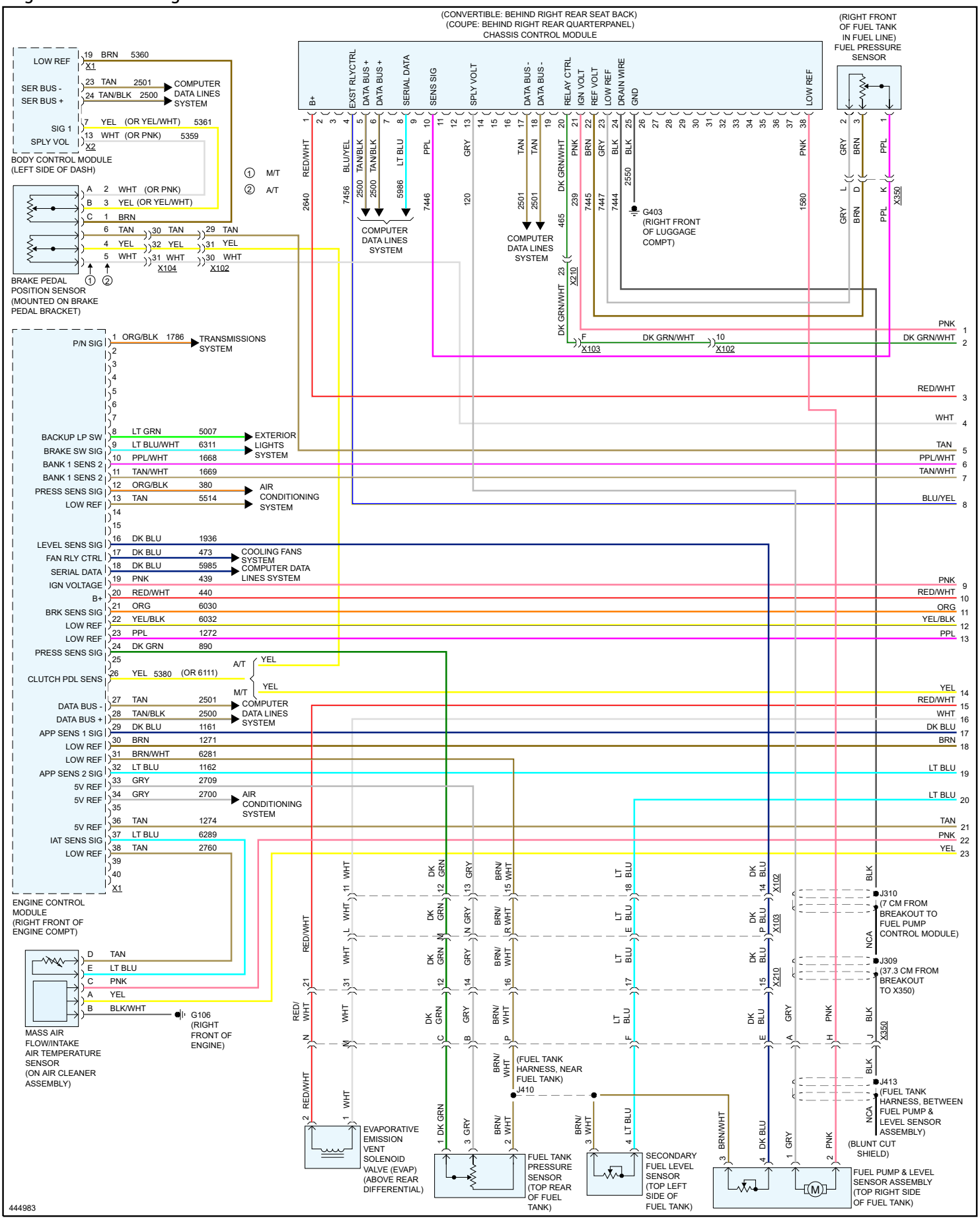

2015 Chevrolet Camaro V8-6.2L VIN W

Vehicle > Powertrain Management > Diagrams > Electrical - Interactive Color (Non OE)

Engine Controls - Page 2 of 6

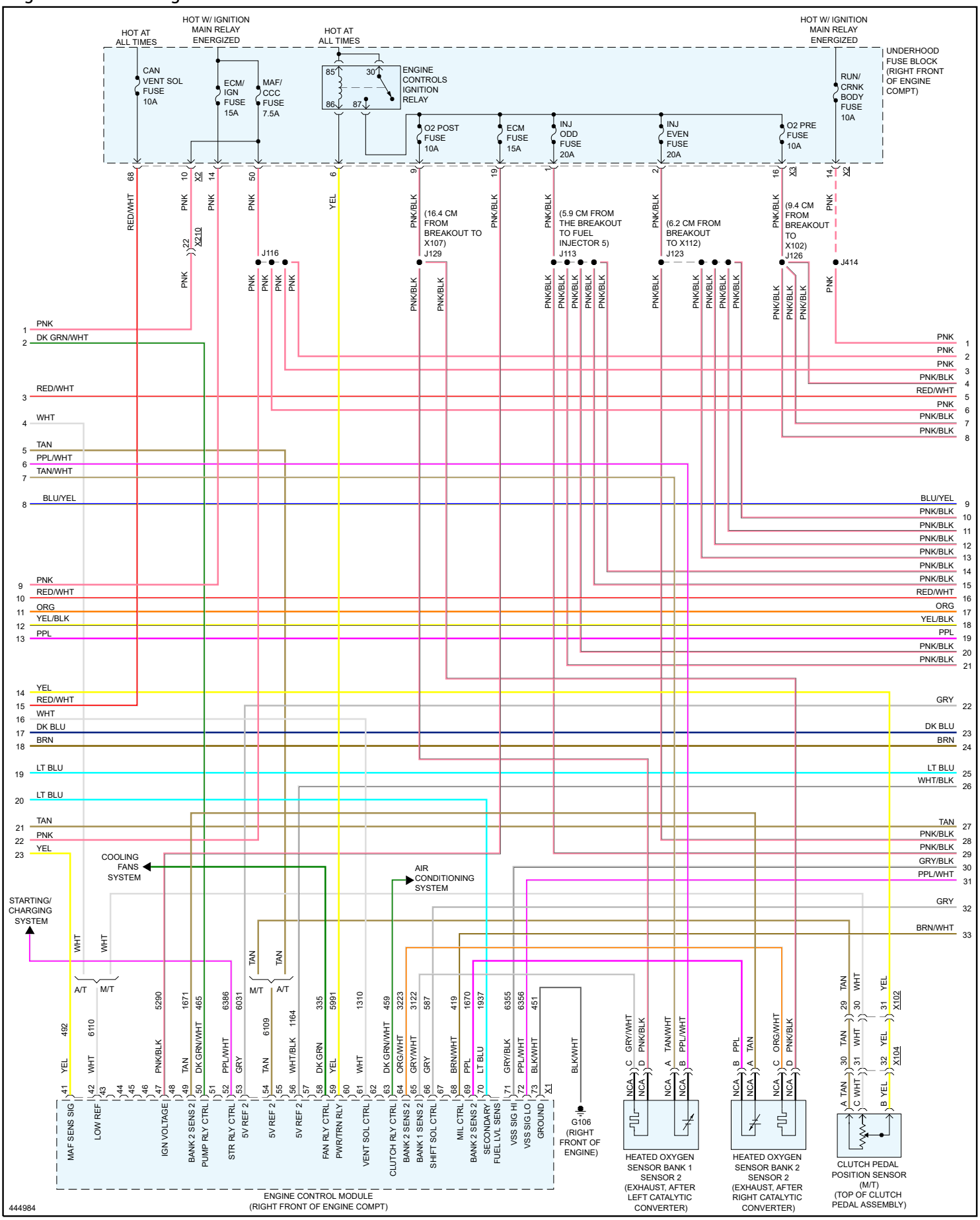

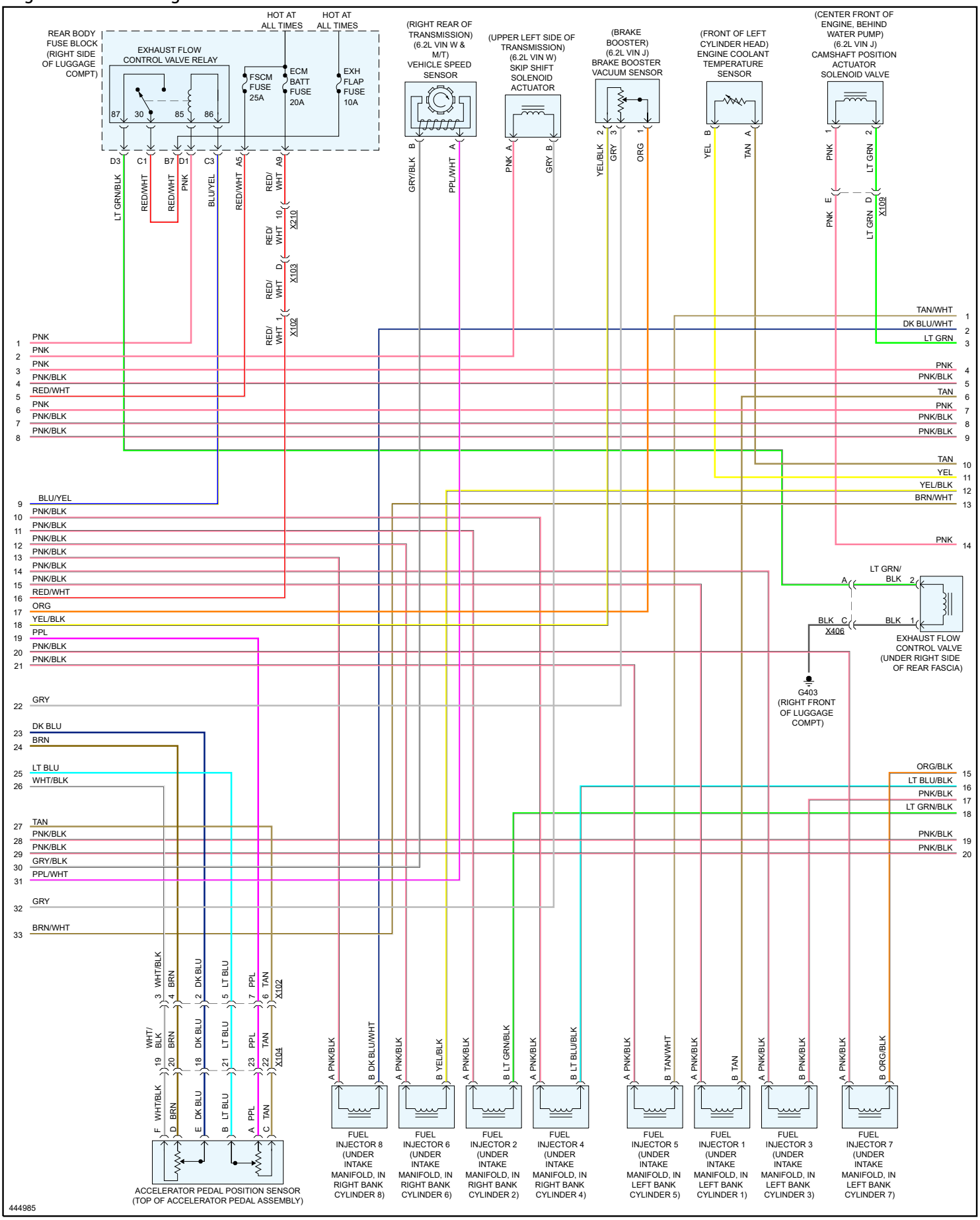
REAR BODY FUSE BLOCK (RIGHT SIDE OF LUGGAGE COMPT)
EXHAUST FLOW CONTROL VALVE RELAY
HOT AT ALL TIMES
HOT AT ALL TIMES
FSCM FUSE 25A
ECM BATT FUSE 20A
EXH FLAP FUSE 10A
(RIGHT REAR OF TRANSMISSION) (6.2L VIN W & M/T) VEHICLE SPEED SENSOR
(UPPER LEFT SIDE OF TRANSMISSION) (6.2L VIN W) SKIP SHIFT SOLENOID ACTUATOR
(BRAKE BOOSTER) (6.2L VIN J) BRAKE BOOSTER VACUUM SENSOR
(FRONT OF LEFT CYLINDER HEAD) ENGINE COOLANT TEMPERATURE SENSOR
(CENTER FRONT OF ENGINE, BEHIND WATER PUMP) (6.2L VIN J) CAMSHAFT POSITION ACTUATOR SOLENOID VALVE
EXHAUST FLOW CONTROL VALVE (UNDER RIGHT SIDE OF REAR FASCIA)
G403 (RIGHT FRONT OF LUGGAGE COMPT)
FUEL INJECTOR 8 (UNDER INTAKE MANIFOLD, IN RIGHT BANK CYLINDER 8)
FUEL INJECTOR 6 (UNDER INTAKE MANIFOLD, IN RIGHT BANK CYLINDER 6)
FUEL INJECTOR 2 (UNDER INTAKE MANIFOLD, IN RIGHT BANK CYLINDER 2)
FUEL INJECTOR 4 (UNDER INTAKE MANIFOLD, IN RIGHT BANK CYLINDER 4)
FUEL INJECTOR 5 (UNDER INTAKE MANIFOLD, IN LEFT BANK CYLINDER 5)
FUEL INJECTOR 1 (UNDER INTAKE MANIFOLD, IN LEFT BANK CYLINDER 1)
FUEL INJECTOR 3 (UNDER INTAKE MANIFOLD, IN LEFT BANK CYLINDER 3)
FUEL INJECTOR 7 (UNDER INTAKE MANIFOLD, IN LEFT BANK CYLINDER 7)
ACCELERATOR PEDAL POSITION SENSOR (TOP OF ACCELERATOR PEDAL ASSEMBLY)
444985

2015 Chevrolet Camaro V8-6.2L VIN W

Vehicle > Powertrain Management > Diagrams > Electrical - Interactive Color (Non OE)

Engine Controls - Page 4 of 6

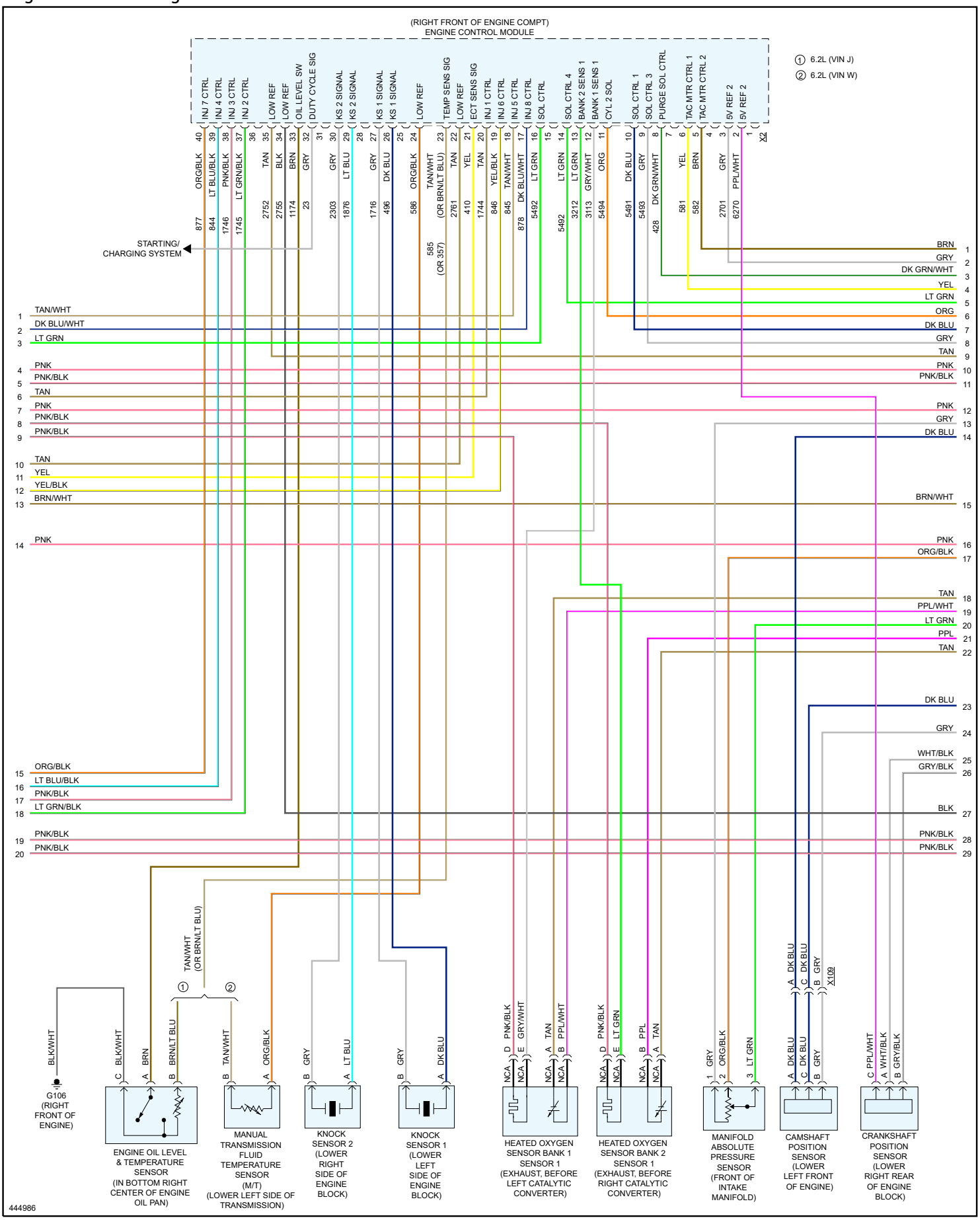

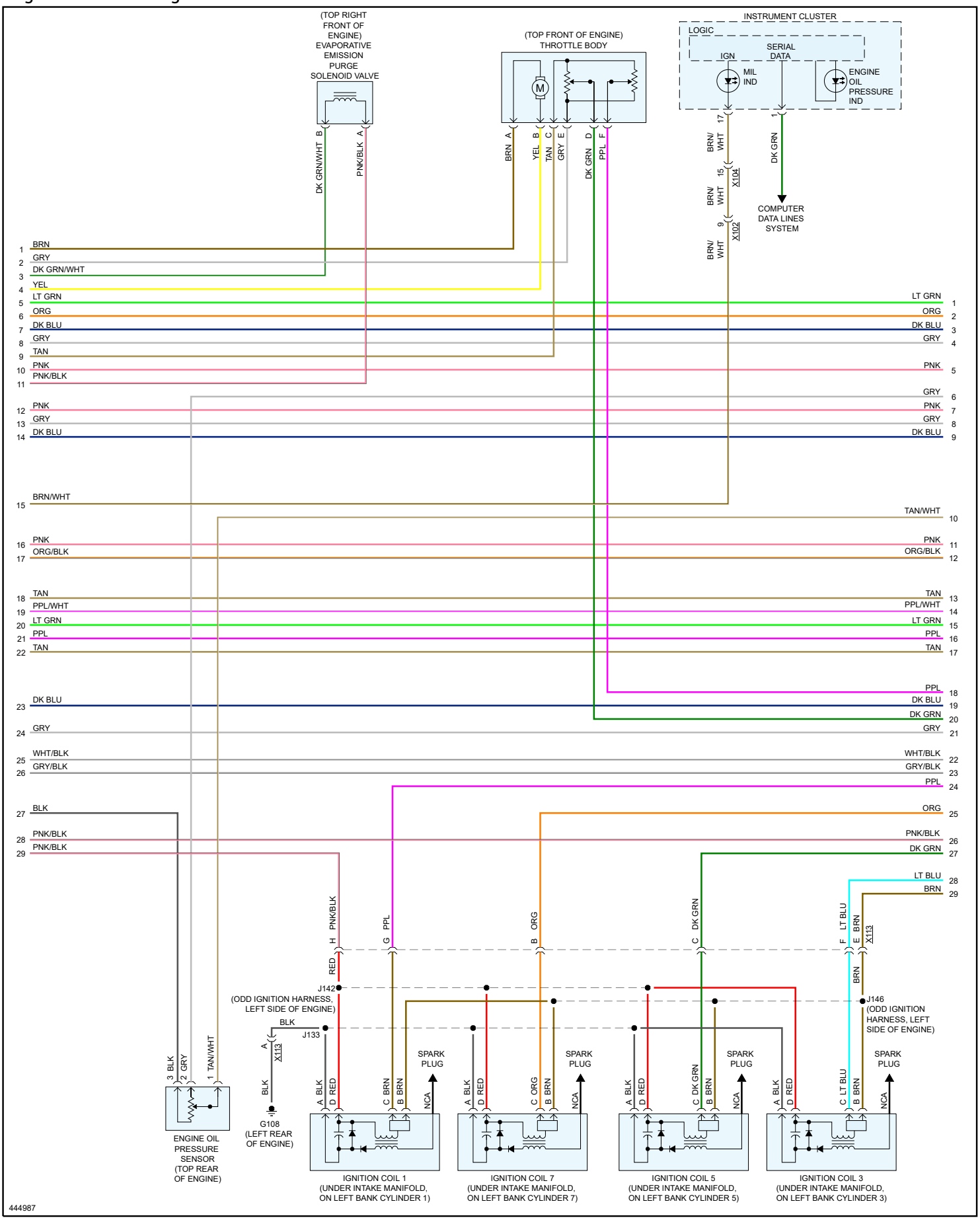
(TOP RIGHT FRONT OF ENGINE) EVAPORATIVE EMISSION PURGE SOLENOID VALVE
(TOP FRONT OF ENGINE) THROTTLE BODY
INSTRUMENT CLUSTER
LOGIC
IGN
SERIAL DATA
MIL IND
ENGINE OIL PRESSURE IND
COMPUTER DATA LINES SYSTEM
X104
X102
X113
J142
(ODD IGNITION HARNESS, LEFT SIDE OF ENGINE)
J146
(ODD IGNITION HARNESS, LEFT SIDE OF ENGINE)
J133
G108
(LEFT REAR OF ENGINE)
ENGINE OIL PRESSURE SENSOR (TOP REAR OF ENGINE)
SPARK PLUG
IGNITION COIL 1 (UNDER INTAKE MANIFOLD, ON LEFT BANK CYLINDER 1)
IGNITION COIL 7 (UNDER INTAKE MANIFOLD, ON LEFT BANK CYLINDER 7)
IGNITION COIL 5 (UNDER INTAKE MANIFOLD, ON LEFT BANK CYLINDER 5)
IGNITION COIL 3 (UNDER INTAKE MANIFOLD, ON LEFT BANK CYLINDER 3)
444987

2015 Chevrolet Camaro V8-6.2L VIN W

Vehicle > Powertrain Management > Diagrams > Electrical - Interactive Color (Non OE)
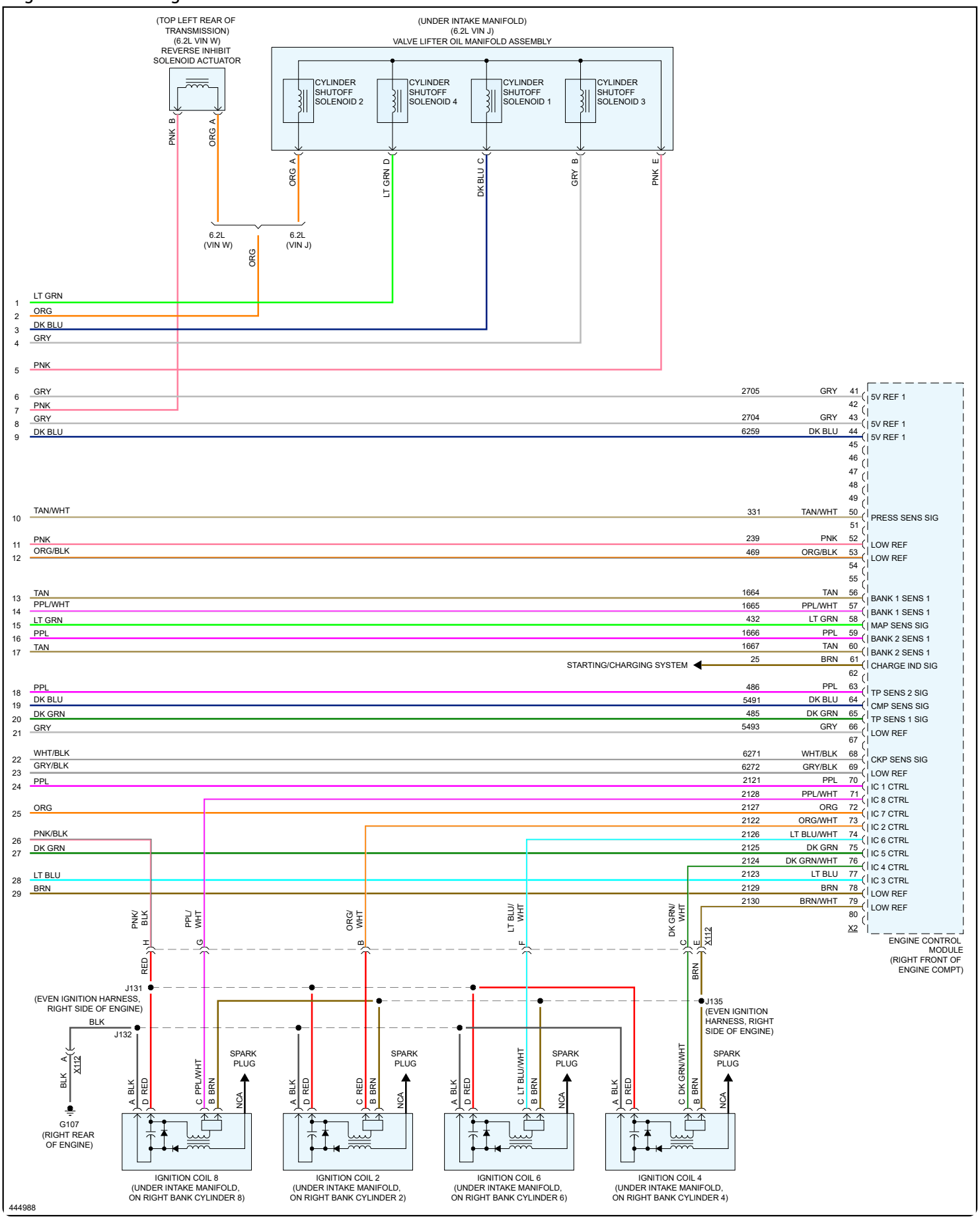
Engine Controls - Page 6 of 6