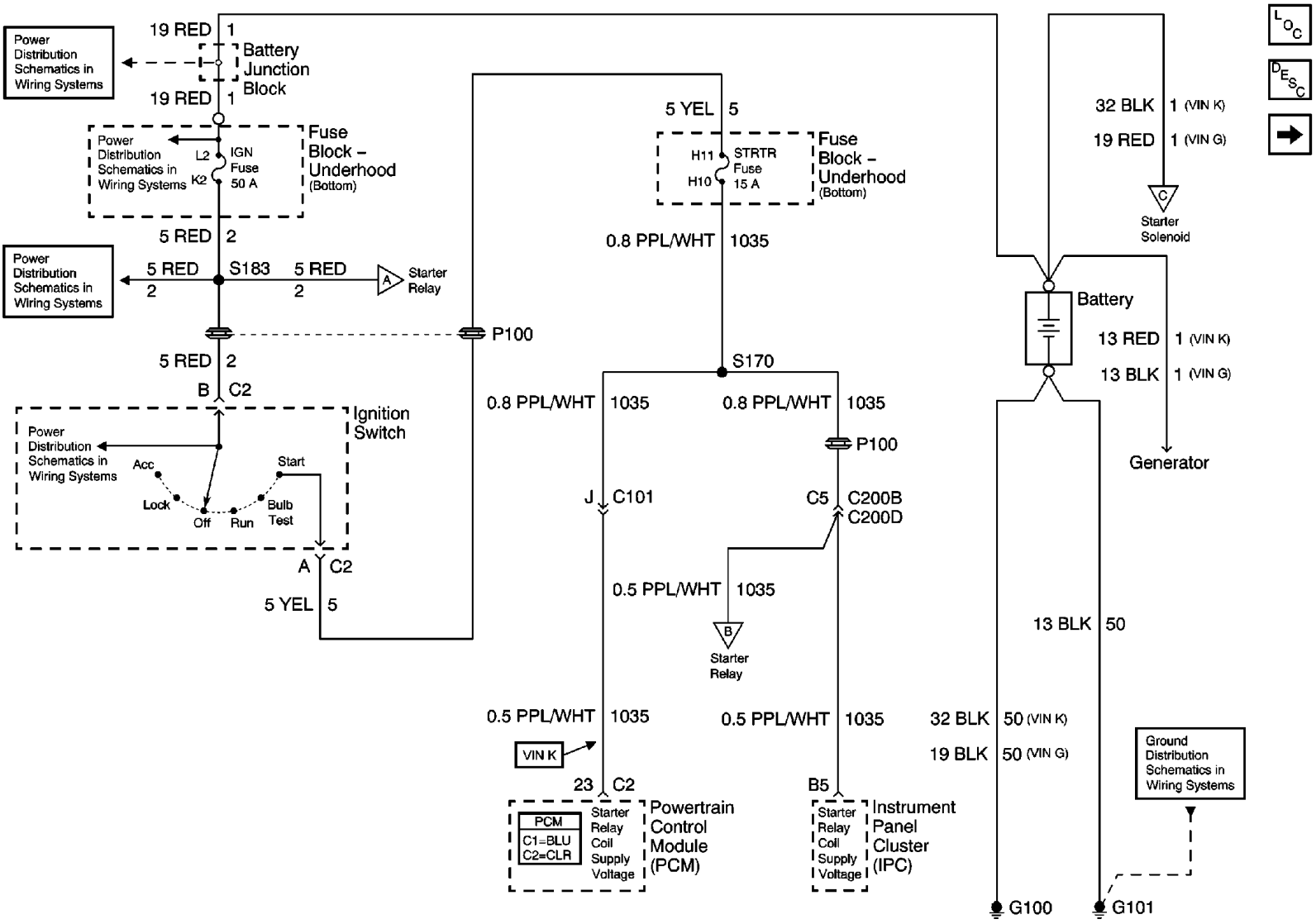
Power Distribution Schematics in Wiring Systems
19 RED 1
Battery Junction Block
19 RED 1
Power Distribution Schematics in Wiring Systems
L2
K2
IGN Fuse 50 A
Fuse Block – Underhood (Bottom)
5 RED 2
Power Distribution Schematics in Wiring Systems
5 RED 2
S183
5 RED 2
A
Starter Relay
P100
5 RED 2
B C2
Ignition Switch
Power Distribution Schematics in Wiring Systems
Acc
Start
Lock
Off
Run
Bulb Test
A C2
5 YEL 5
5 YEL 5
H11
H10
STRTR Fuse 15 A
Fuse Block – Underhood (Bottom)
0.8 PPL/WHT 1035
S170
0.8 PPL/WHT 1035
0.8 PPL/WHT 1035
P100
J C101
C5 C200B C200D
0.5 PPL/WHT 1035
B
Starter Relay
0.5 PPL/WHT 1035
0.5 PPL/WHT 1035
VIN K
23 C2
B5
PCM
C1=BLU
C2=CLR
Starter Relay Coil Supply Voltage
Powertrain Control Module (PCM)
Starter Relay Coil Supply Voltage
Instrument Panel Cluster (IPC)
32 BLK 1 (VIN K)
19 RED 1 (VIN G)
C
Starter Solenoid
Battery
13 RED 1 (VIN K)
13 BLK 1 (VIN G)
Generator
13 BLK 50
32 BLK 50 (VIN K)
19 BLK 50 (VIN G)
Ground Distribution Schematics in Wiring Systems
G100
G101