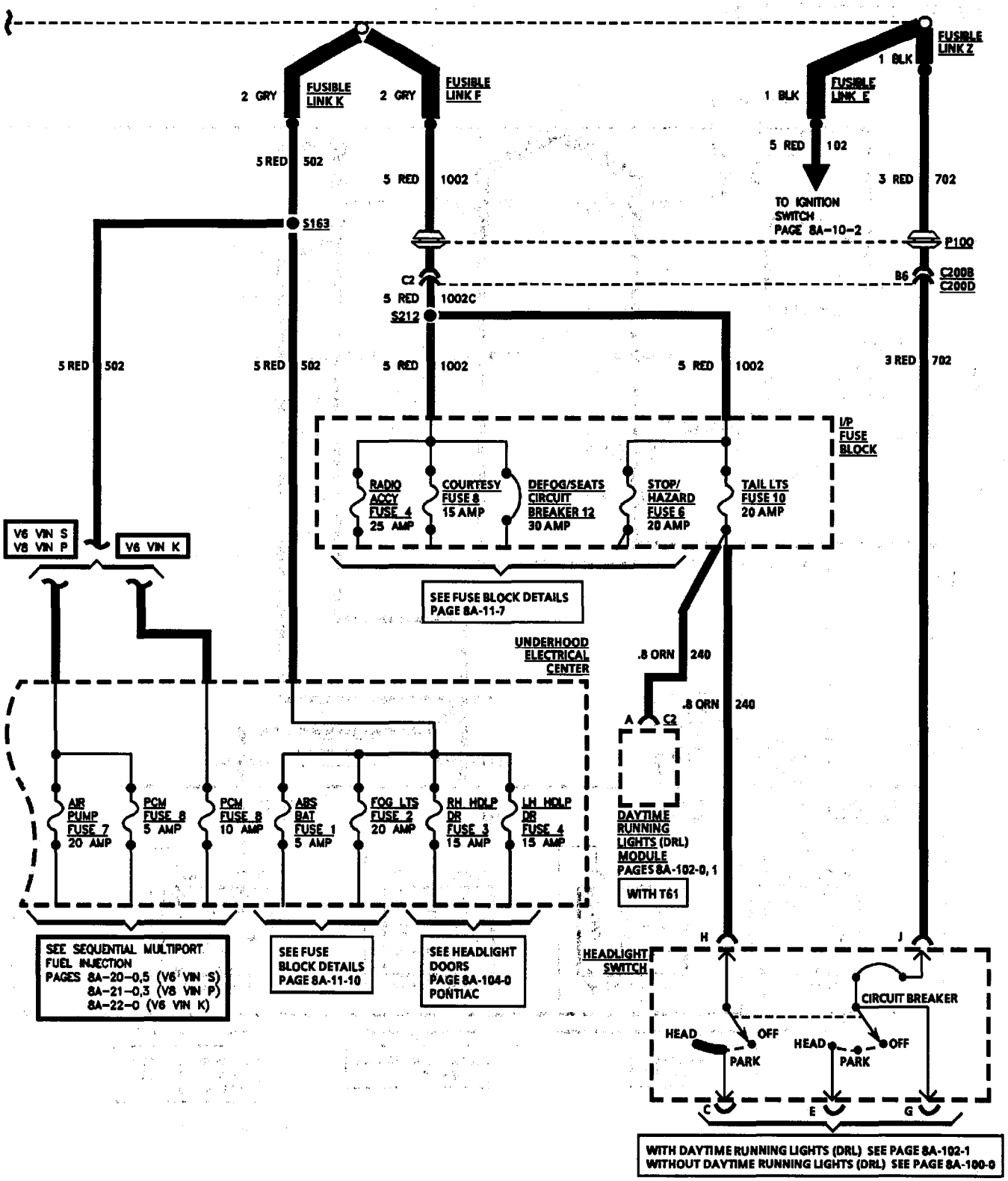

5-21-94
FS0018A010

EXTERIOR LIGHTS

REAR MARKER/LICENSE/TAIL/STOP/TURN (PONTIAC)

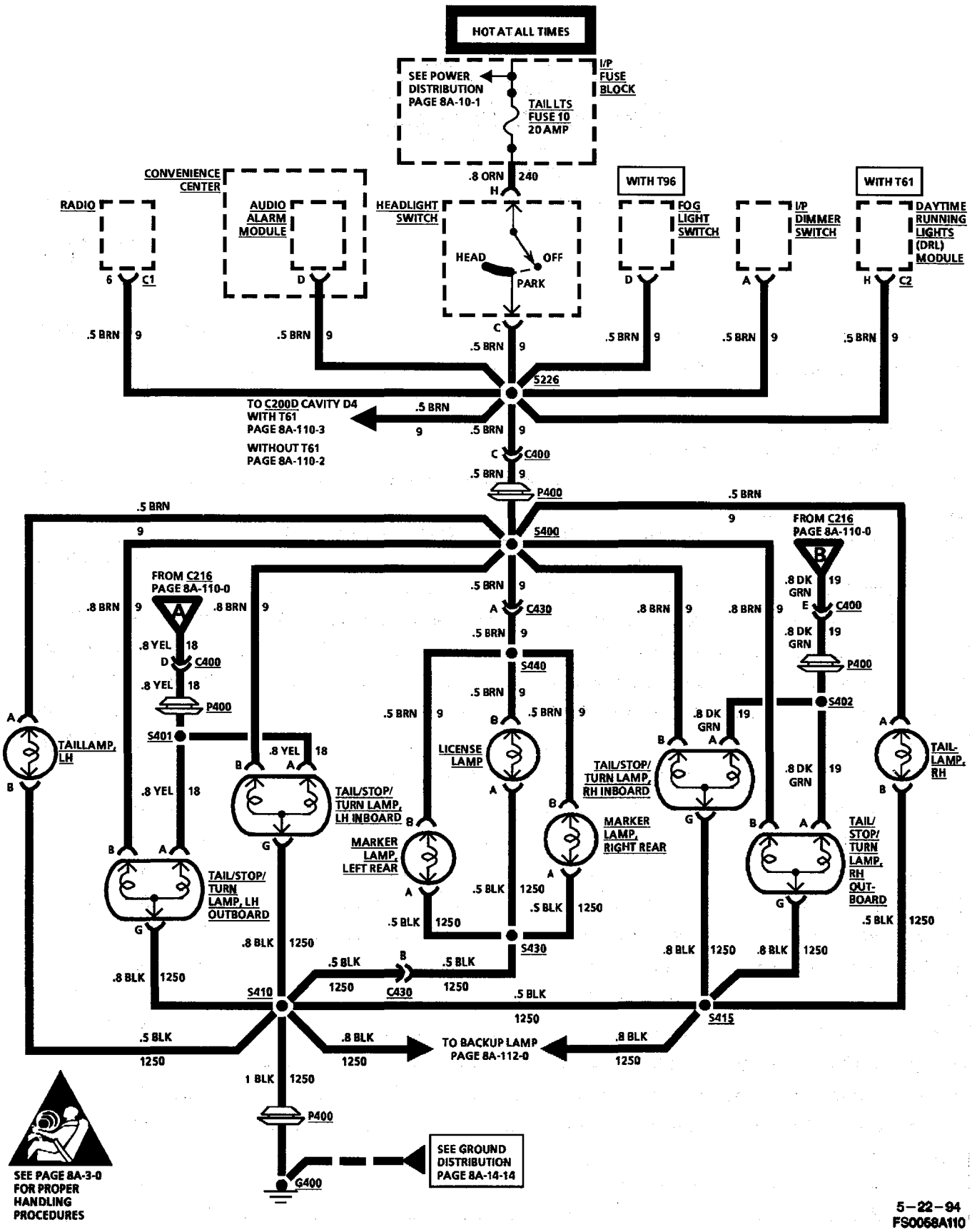

5-22-94
FS0058A110