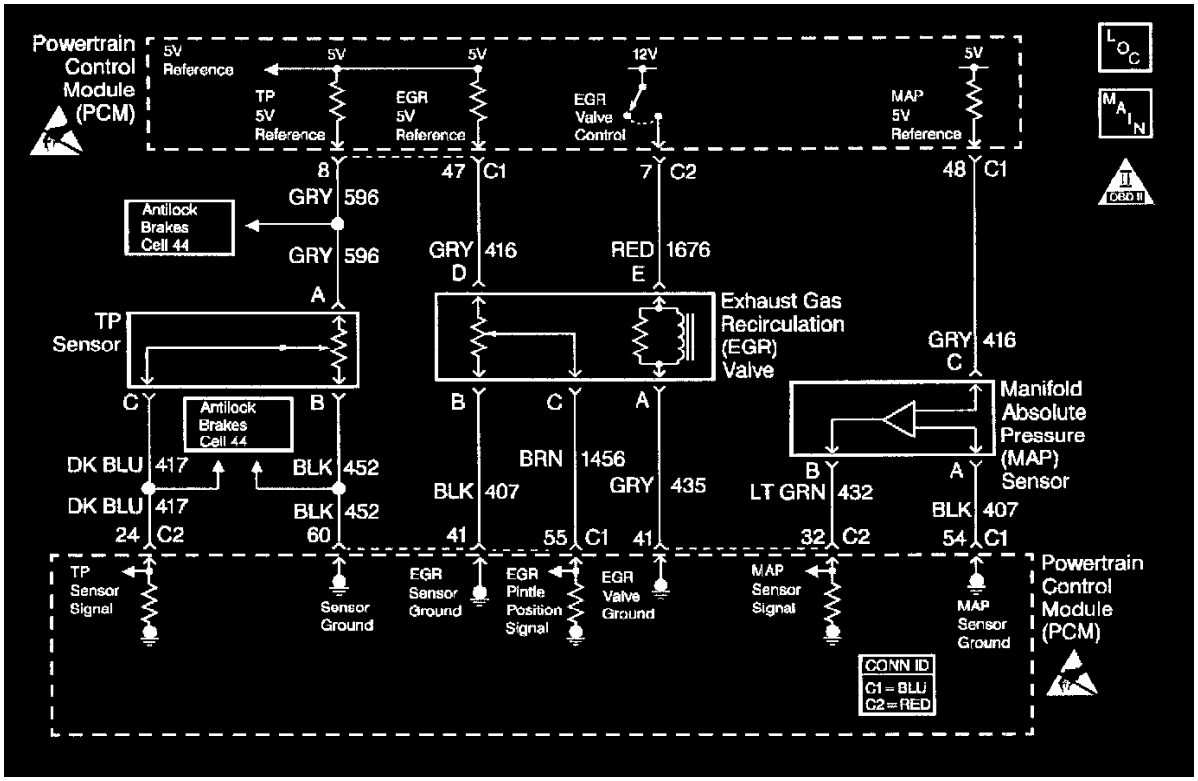
Powertrain Control Module (PCM)
5V Reference
5V
5V
12V
5V
TP 5V Reference
EGR 5V Reference
EGR Valve Control
MAP 5V Reference
8
47 C1
7 C2
48 C1
GRY 596
Antilock Brakes Cell 44
GRY 596
A
GRY 416
D
RED 1676
E
TP Sensor
Exhaust Gas Recirculation (EGR) Valve
GRY 416
C
Manifold Absolute Pressure (MAP) Sensor
C
B
Antilock Brakes Cell 44
B
C
A
DK BLU 417
BLK 452
BRN 1456
DK BLU 417
BLK 452
BLK 407
GRY 435
B
LT GRN 432
A
BLK 407
24 C2
60
41
55 C1
41
32 C2
54 C1
TP Sensor Signal
Sensor Ground
EGR Sensor Ground
EGR Pintle Position Signal
EGR Valve Ground
MAP Sensor Signal
MAP Sensor Ground
Powertrain Control Module (PCM)
CONN ID
C1 = BLU
C2 = RED
LOC
MAIN
OBD II