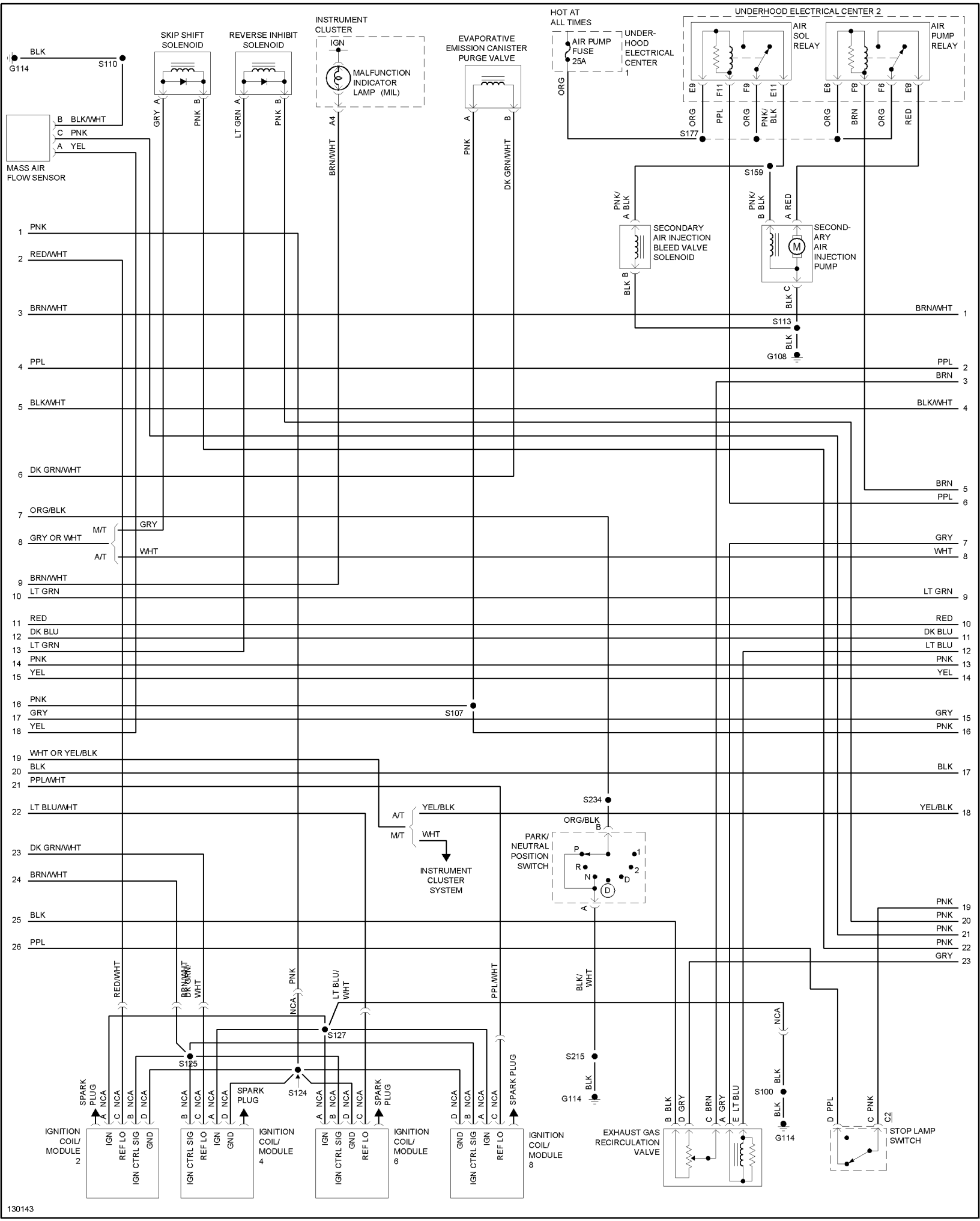
G114
BLK
S110
MASS AIR FLOW SENSOR
B BLK/WHT
C PNK
A YEL
SKIP SHIFT SOLENOID
REVERSE INHIBIT SOLENOID
INSTRUMENT CLUSTER
IGN
MALFUNCTION INDICATOR LAMP (MIL)
EVAPORATIVE EMISSION CANISTER PURGE VALVE
HOT AT ALL TIMES
AIR PUMP FUSE 25A
UNDER-HOOD ELECTRICAL CENTER 1
UNDERHOOD ELECTRICAL CENTER 2
AIR SOL RELAY
AIR PUMP RELAY
S177
S159
SECONDARY AIR INJECTION BLEED VALVE SOLENOID
SECOND-ARY AIR INJECTION PUMP
S113
G108
S107
S234
PARK/ NEUTRAL POSITION SWITCH
INSTRUMENT CLUSTER SYSTEM
S127
S125
S124
S215
G114
S100
SPARK PLUG
IGNITION COIL/ MODULE 2
IGNITION COIL/ MODULE 4
IGNITION COIL/ MODULE 6
IGNITION COIL/ MODULE 8
EXHAUST GAS RECIRCULATION VALVE
STOP LAMP SWITCH
C2
130143