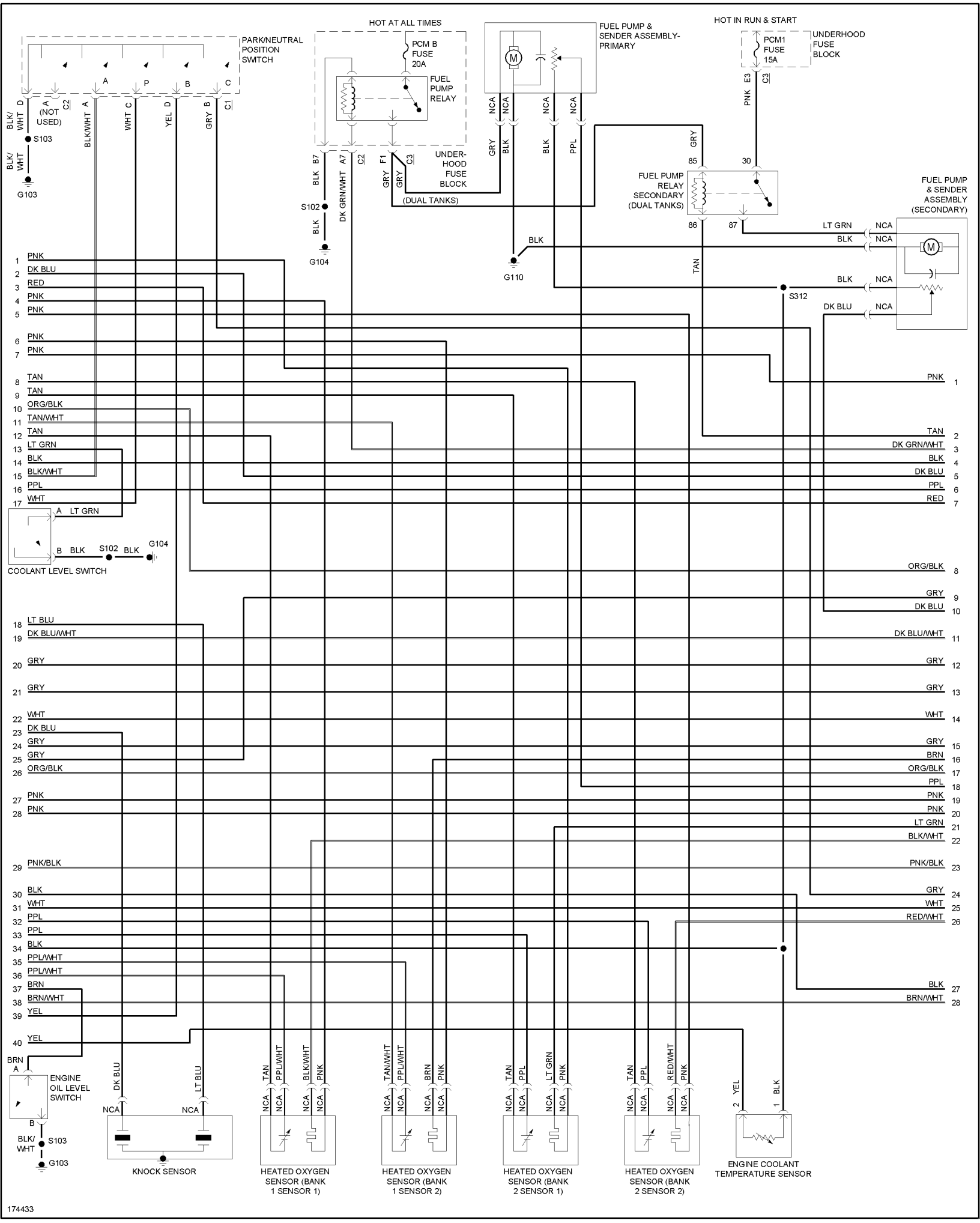
PARK/NEUTRAL POSITION SWITCH
A
P
B
C
(NOT USED)
C2
C1
S103
G103
HOT AT ALL TIMES
PCM B FUSE 20A
FUEL PUMP RELAY
UNDER-HOOD FUSE BLOCK
(DUAL TANKS)
S102
G104
FUEL PUMP & SENDER ASSEMBLY-PRIMARY
G110
HOT IN RUN & START
PCM1 FUSE 15A
UNDERHOOD FUSE BLOCK
FUEL PUMP RELAY SECONDARY (DUAL TANKS)
FUEL PUMP & SENDER ASSEMBLY (SECONDARY)
S312
COOLANT LEVEL SWITCH
ENGINE OIL LEVEL SWITCH
KNOCK SENSOR
HEATED OXYGEN SENSOR (BANK 1 SENSOR 1)
HEATED OXYGEN SENSOR (BANK 1 SENSOR 2)
HEATED OXYGEN SENSOR (BANK 2 SENSOR 1)
HEATED OXYGEN SENSOR (BANK 2 SENSOR 2)
ENGINE COOLANT TEMPERATURE SENSOR
174433